60cm Series 9 1 Burner + 2 Zone Hybrid Cooktop, 2 SmartZones, LPG

Series 9 | Minimal

Black Glass | LPG

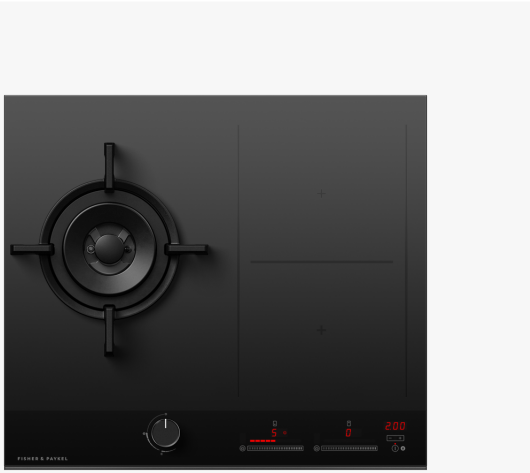

Get the best of both worlds with a powerful gas cooktop paired with the efficiency and precision of induction cook zones.

- A dual fuel cooktop with two induction zones and a gas wok burner
- With black detailing and Minimal styling to suit any kitchen design
- With a flame-failure safety device and an induction surface that remains cool until a pot or pan is placed on top.
- PowerBoost activates a very high heat, bringing liquid to boil in less than a minute

DIMENSIONS

Height	126 mm
Width	599 mm
Depth	530 mm

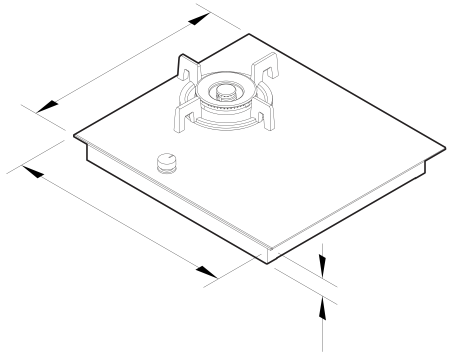

FEATURES & BENEFITS

Combination Cooking

Experience the best of combination cooking with our dual fuel gas and induction cooktop. Featuring a powerful wok burner combined with two induction cooking zones for ultimate flexibility in the kitchen.

Precise Control

Our induction cooktops offer extremely accurate temperature control from very high to very low heats, so you can sear, sauté and temper like a pro. The powerful gas burner has consistent flame and heat distribution, perfect for wok-style cooking.

Complementary Design

The subtle black glass, durable matte black detailing, and black dial blend elegance with durability. With premium styling, these cooktops seamlessly blend with other appliances for a cohesive, considered kitchen design.

Safe And Sound

Induction cooktops remain cool to touch until a pot or pan is placed on the surface – so they are safer for everyone. The flame failure safety device automatically turns off the gas on the burner if the flame is accidentally extinguished.

Easy Cleaning

With a single cooking surface across both gas and the induction, this cooktop is simple to clean. On the induction cooktop, the surface around your cookware stays cool when you cook, preventing baked-on spills and making cleaning up a breeze.

Large, Flexible Cooking Area

SmartZone links two cooking zones and controls them as one, giving you the flexibility to use large pans and griddles and easily handle bigger food items such as a whole fish.

Quality Materials

Our cooktops are built from a single panel of toughened ceramic glass with larger support frame, ensuring lasting quality.

SPECIFICATIONS

Accessories (included)

Small pan support	•
Wok stand	true

Burner ratings

Dual wok burner (inner only)	2.4MJ/h
Dual wok burner power	21.5MJ/h

Cleaning

Easy clean cooktop design	•
Flat easy clean glass surface	•
Quick component removal	•

Consumption

In-use energy carbon emissions estimate	0.0kgCO2e/year

Controls

Auto cut-off timer for each zone	•
Dual wok control	•
Minute timer	•
Soft-touch electronic controls	•
Touch and slide controls	•
Toughened fused glass graphics	•

Performance

Auto rapid heat	•
Blue flame burner	•
Both LPG & NG models available	•
Cast iron trivets	•
Dual colour display	•
Electronic ignition	•
Gentle heat	•
Heat settings	9
Induction cooking technology	•
PowerBoost	•
Quick connect gas valves	•
SmartZone	•
Zone bridging	•

Power requirements

Amperage	10A gas, 16A induction A
Supply voltage	230-240V gas, 220-240V induction V

Product dimensions

Depth	530 mm
Height	126 mm
Width	599 mm

Safety

Individual hot surface indicators	•
Keylock	•
Pan detection system	•
Safety time out	•
Spillage auto off	•
Surface hot indicators	•

Zone ratings

PowerBoost	up to 3700W
Right front zone (PowerBoost set)	2100W (3700W)
Right rear zone (PowerBoost set)	2100W (3700W)

Zones

Number of zones	3

SKU	82206

The product dimensions and specifications in this page apply to the specific product and model. Under our policy of continuous improvement, these dimensions and specifications may change at any time. You should therefore check with Fisher & Paykel's Customer Care Centre to ensure this page correctly describes the model currently available. © Fisher & Paykel Appliances Ltd 2020

Other product downloads available at fisherpaykel.com

- DXF
- DWG
- Installation Guide (English)
- Installation Guide (English)
- Revit
- Rhino
- SketchUp
- User Guide (English)
- User Guide (English)

Where applicable:

All appliances use energy, and energy usage typically generates carbon emissions. **Fisher & Paykel Appliances' In-use Energy Carbon Emissions Estimate** indicates carbon emissions from a product's in-use energy. This is calculated either annually or per cycle, using the product's market-specific energy label energy consumption data multiplied by the carbon emissions factor for energy in your country or region.

Our In-use Energy Carbon Emissions Estimate is designed to assist customers in making informed purchasing decisions when comparing different Fisher & Paykel products. For example, a heat pump dryer typically has a lower In-use Energy Carbon Emissions Estimate than a vented dryer.

24/7

A PEACE OF MIND SALE
24 Hours 7 Days a Week Customer Support
T 0800 372 273 Wwww.fisherpaykel.com