25" DCS Beverage Chiller/Sink

Stainless Steel



An ultimate entertainer`s feature, the 25" DCS Beverage Chiller is a deep, fully insulated compartment that can hold up to 17 gallons of ice to chill your refreshments. The Accessory, designed to house 1-liter bottles, can be installed at the front of your Beverage Chiller, freeing it up to be used as an outdoor sink.

DIMENSIONS

Height	306 mm
Width	670 mm
Depth	557 mm

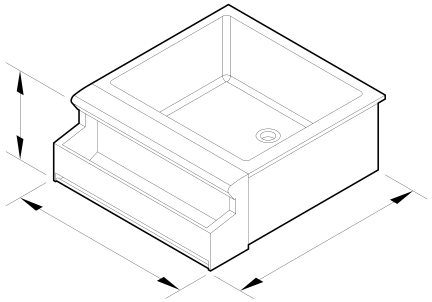

SPECIFICATIONS

Accessories (included)

Condiment storage containers	4
Lid	•

Accessories (sold separately)

1 liter bottle holder	BC BOTTLEAC25

Capacity

Accommodates long neck beverages and wine bottles	•
Gallons of ice held	17

Finish

Built-in installation	•
Material	304 grade stainless steel
Weather resistant	•

Performance

Commercial quality material	•
Insulated double walled construction	•
Insulated stainless steel lid	•
Plumbing conversion to 25" sink	•

Product dimensions

Depth	557 mm
Height	306 mm
Width	670 mm

SKU 71251

The product dimensions and specifications in this page apply to the specific product and model. Under our policy of continuous improvement, these dimensions and specifications may change at any time. You should therefore check with Fisher & Paykel's Customer Care Centre to ensure this page correctly describes the model currently available. © Fisher & Paykel Appliances Ltd 2020

Other product downloads available at fisherpaykel.com

- DXF
- DXF
- Data Sheet Bottle Holder and Chiller Sink (English)
- Data Sheet (English)
- DWG

- DWG
- Rhino
- Service & Warranty (English, Canadian French)
- DCS Service & Warranty (English, Canadian French)

Where applicable:

All appliances use energy, and energy usage typically generates carbon emissions. **Fisher & Paykel Appliances' In-use Energy Carbon Emissions Estimate** indicates carbon emissions from a product's in-use energy. This is calculated either annually or per cycle, using the product's market-specific energy label energy consumption data multiplied by the carbon emissions factor for energy in your country or region.

Our In-use Energy Carbon Emissions Estimate is designed to assist customers in making informed purchasing decisions when comparing different Fisher & Paykel products. For example, a heat pump dryer typically has a lower In-use Energy Carbon Emissions Estimate than a vented dryer.



A PEACE OF MIND SALE
24 Hours 7 Days a Week Customer Support

T 0800 372 273 **W**www.fisherpaykel.com