External Blower

Professional



This remote external blower can be placed anywhere, working with a downdraft range hood to extract unwanted grease, smoke and odors.

- Can be paired with a downdraft range hood such as HD36 or HD30
- With the flexibility to be installed outside the kitchen for noise-free extraction
- Powerful 1200CFM maximum airflow

DIMENSIONS

Height	**8 1/4 "**
Width	**26 3/4 "**
Depth	**33 1/4 "**

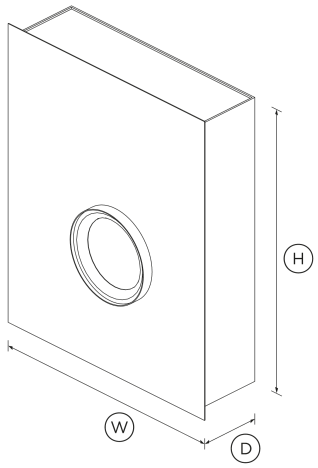

SPECIFICATIONS

Fan ratings

Maximum air movement	**1200 CFM**

Installation and cleaning

Air outlet size	**10" "**

Power requirements

Rated current	**1.8 A**
Supply frequency	**60 Hz**
Supply voltage	**120 V**

Product dimensions

Depth	**33 1/4 "**
Height	**8 1/4 "**
Width	**26 3/4 "**

SKU 50047

The product dimensions and specifications in this page apply to the specific product and model. Under our policy of continuous improvement, these dimensions and specifications may change at any time. You should therefore check with Fisher & Paykel's Customer Care Centre to ensure this page correctly describes the model currently available. © Fisher & Paykel Appliances Ltd 2020

Other product downloads available at fisherpaykel.com

- Archicad
- Revit
- Rhino
- Sketchup
- Installation & User Guide (English, Canadian French)

Where applicable:

All appliances use energy, and energy usage typically generates carbon emissions. **Fisher & Paykel Appliances' In-use Energy Carbon Emissions Estimate** indicates carbon emissions from a product's in-use energy. This is calculated either annually or per cycle, using the product's market-specific energy label energy consumption data multiplied by the carbon emissions factor for energy in your country or region.

Our In-use Energy Carbon Emissions Estimate is designed to assist customers in making informed purchasing decisions when comparing different Fisher & Paykel products. For example, a heat pump dryer typically has a lower In-use Energy Carbon Emissions Estimate than a vented dryer.



A PEACE OF MIND SALE

24 Hours 7 Days a Week Customer Support

T 1.888.936.7872 **W**www.fisherpaykel.com