120cm Series 7 Box Chimney Wall Rangehood

Series 7 | Contemporary

Stainless Steel and Glass



The wall chimney rangehood has a contemporary styling, extracting steam, grease and cooking odours quietly and efficiently.

- With three fan speeds plus boost, select the perfect extraction rate for your cooking
- Powerful maximum air movement of 780m³/hr
- Energy-efficient LED lighting to illuminate your cooking surface

DIMENSIONS

Height	595-1035 mm
Width	1198 mm
Depth	500 mm

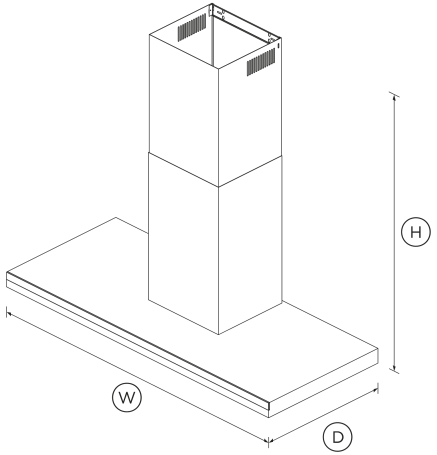

FEATURES & BENEFITS

Effective And Quiet

This rangehood features three fan speeds, plus a boost function, providing powerful extraction to quickly remove odours and steam. The timer keeps the rangehood working for up to 15 minutes before automatically turning off.

Simple To Use

This Fisher & Paykel rangehood features a sleek and easy to use touch-control panel. Low energy, dimmable LED lights provide superb illumination over the entire cooking surface.

Easy Cleaning

Designed for simple removal, the filters are easy to clean and dishwasher safe. The stainless steel mesh cover just needs a quick wipe to keep clean. An alert reminds you when to clean the filter to ensure you get the best performance out of your rangehood.

Seamless Integration

This wall chimney rangehood features sleek black glass and stainless steel styling that will complement any contemporary kitchen, and is designed to match the rest of Fisher & Paykel's kitchen appliance family.

SPECIFICATIONS

Accessories (sold separately)

Chimney extension	791774
Eave ducting kit	PD-RHK150E
Light bulb	792556
Recirculation carbon filter	792481
Recirculation diverter	792560
Roof ducting kit	PD-RHK150T
Side wall ducting kit	PD-RHK150W

Fan ratings

Maximum air movement	780 m³/hr
Maximum sound rating	65 dBA

Installation and cleaning

Air outlet size	150 mm
Dishwasher safe filters	4
Ducted	Top extraction
Internal blower included	•
Recirculation	Optional - top extraction
Stainless steel filter cover	•

Two piece height adjustable flue	•

Performance

Airflow balancing plate	•
Extraction type	Surface
Fan speeds	3
Filter type	Mesh
Number of filters	4

Power requirements

Lighting power	8 W
Motor power	240 W
Supply voltage	120 V
Total Power	248 W

Product dimensions

Depth	500 mm
Height	595-1035 mm
Width	1198 mm

Ventilation features

Dimmable lights	•
Filter cleaning alert	•
Light type	LED
Timer function	•

SKU	50114

The product dimensions and specifications in this page apply to the specific product and model. Under our policy of continuous improvement, these dimensions and specifications may change at any time. You should therefore check with Fisher & Paykel's Customer Care Centre to ensure this page correctly describes the model currently available. © Fisher & Paykel Appliances Ltd 2020

Other product downloads available at fisherpaykel.com

- DXF
- Archicad
- Data Sheet (English)
- DWG
- Revit
- Rhino
- SketchUp
- Installation & User Guide (English)

Where applicable:

All appliances use energy, and energy usage typically generates carbon emissions. **Fisher & Paykel Appliances' In-use Energy Carbon Emissions Estimate** indicates carbon emissions from a product's in-use energy. This is calculated either annually or per cycle, using the product's market-specific energy label energy consumption data multiplied by the carbon emissions factor for energy in your country or region.

Our In-use Energy Carbon Emissions Estimate is designed to assist customers in making informed purchasing decisions when comparing different Fisher & Paykel products. For example, a heat pump dryer typically has a lower In-use Energy Carbon Emissions Estimate than a vented dryer.

24/7

A PEACE OF MIND SALE
24 Hours 7 Days a Week Customer Support

T 0800 372 273 Wwww.fisherpaykel.com