17 cu ft Series 7 French Door Refrigerator Freezer

Contemporary



Designed for those who need plenty of flexible space for their cold and frozen food storage, with a classic white finish.

- ActiveSmart™ helps keep food fresher for longer
- Brushed metal handles
- Bottom freezer drawer

DIMENSIONS

Height	**67 3/4 "**
Width	**31 1/8 "**
Depth	**27 3/8 "**

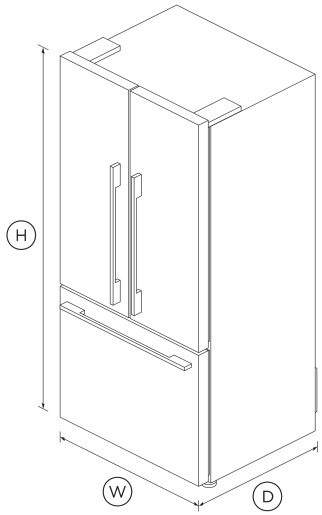

FEATURES & BENEFITS

Activesmart™ Foodcare

ActiveSmart™ Foodcare learns how you live. It's technology which understands how you use your refrigerator and adjusts temperature, airflow and humidity inside to help keep food fresher for longer.

Simple Storage

This refrigerator is designed to make it simple for you to store, access and remove food. Storage bins give you full access inside when they're pulled open and can be easily removed to clean. Our flexible shelving also gives you more storage options.

Easy Cleaning

Spill-safe secure glass shelves easily capture any drips or leaks and prevent them from falling on items below.

Clever Energy

Your refrigerator adapts to daily use by cooling and defrosting only when needed. This means your refrigerator uses the energy it needs without compromising on food care.

Design Quality

Our refrigerators are designed and built using quality materials. We use pre-painted steel on our refrigerators and solid glass for shelving.

SPECIFICATIONS

Capacity

Total gross capacity	**17.5 cu ft**
Volume freezer	**4.8 cu ft**
Volume refrigerator	**12.1 cu ft**

Consumption

Energy rating	**Energy Star**
Energy usage	**448kWh/year**
In-use energy carbon emissions estimate	**51.7kgCO2e/year**

Features

Adjustable door shelves	**14**
Adjustable glass shelves	**3**
Covered door shelves	**2**
Door alarm	•
Fruit and vegetable bins	**2**
LED lighting	•

Smart appliance	•
SmartTouch control panel	•
Stackable bottle holders	**4**

Freezer Features

Bottle chill	•
Fast freeze	•
Ice trays	**1**

Performance

ActiveSmart™ Foodcare	•
Adaptive defrost	•
Frost free freezer	•
Humidity control system	•
Sabbath mode	•

Product dimensions

Depth	**27 3/8 "**
Height	**67 3/4 "**
Minimum air clearance at rear	**1 3/16 "**
Minimum air clearance each side	**1 3/16 "**
Width	**31 1/8 "**

SKU	26282

The product dimensions and specifications in this page apply to the specific product and model. Under our policy of continuous improvement, these dimensions and specifications may change at any time. You should therefore check with Fisher & Paykel's Customer Care Centre to ensure this page correctly describes the model currently available. © Fisher & Paykel Appliances Ltd 2020

Other product downloads available at fisherpaykel.com

- Energy Label
- Installation Guide (English)
- Water Filter Replacement Instructions - Parts 847200 and 847201 (French)

Where applicable:

All appliances use energy, and energy usage typically generates carbon emissions. **Fisher & Paykel Appliances' In-use Energy Carbon Emissions Estimate** indicates carbon emissions from a product's in-use energy. This is calculated either annually or per cycle, using the product's market-specific energy label energy consumption data multiplied by the carbon emissions factor for energy in your country or region.

Our In-use Energy Carbon Emissions Estimate is designed to assist customers in making informed purchasing decisions when comparing different Fisher & Paykel products. For example, a heat pump dryer typically has a lower In-use Energy Carbon Emissions Estimate than a vented dryer.

24/7

A PEACE OF MIND SALE

24 Hours 7 Days a Week Customer Support

T 1.888.936.7872 **W**www.fisherpaykel.com