12kg Series 9 Contemporary Front Loader Washer, FlexiDose

Series 9 | Front Load

White



A sophisticated Front Loader Washer offering thorough cleaning and tailored treatments. With intelligent sensing and delicate care, the glass control panel with vibrant 7" touchscreen ensures every cycle is gentle, precise and optimised,

- Sophisticated care for 8 fibre types, including natural Linen and Silk
- Vibrant 7" touchscreen for intuitive cycle selection
- 5 stain treatments carefully fine-tuned for 3 different fibre types
- Tumbling post-wash prevents creases, and after unloading, air dries the drum with the door closed
- Connect SmartHQ™ for real-time updates, expert guides, extra functions and software updates

DIMENSIONS

Height	850 mm
Width	602 mm
Depth	661 mm

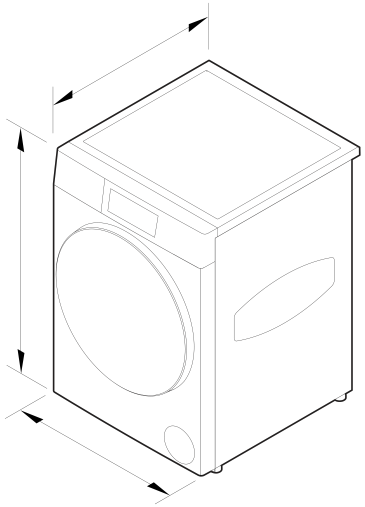

FEATURES & BENEFITS

SPECIALISED CARE FOR EVERY FABRIC

Every wash in our Fisher & Paykel Series 9 Washers is tailored to the unique molecular structure of each fibre type. Care for Silk blouses, Linen trousers and even handwash-only Wool with the certified Woolmark Green cycle, guided by the vivid 7" touchscreen for effortless control at your fingertips. Intelligent technology accounts for the moisture absorption and fibre construction of each garment, adjusting temperature, speed, drum movement and detergent to deliver a perfectly balanced clean while extending the life of your garments.

TAILORED STAIN CARE

Stains behave differently depending on the fibre they're on — Butter should be washed in a solid state to prevent it from sinking into the pores of the fibre, while Tea, Coffee, and Red Wine cling more strongly to Cotton than Polyester. Our 5 Stain Treatments for 3 fibre types provide pre- or in-wash care tailored to both fibre and stain, lifting marks effectively while protecting the life and quality of your garments.

PRECISION IN EVERY DETAIL

Our most perfect pair yet, reimagined for modern living. With a single 7" touchscreen, angled and streamlined for effortless cycle control, plus a newly positioned lint filter on the dryer, it offers a seamless fabric care experience, elevated beyond the utility space. Designed to complement one another in both form and function, our Front Loader Washers and Heat Pump Dryers feature refined materials, large doors and complementary cycles that work in harmony to care for a wide range of fibres.

CUSTOMISED AUTO DOSING, IDEAL FOR SILK

Everyday routines are simpler when the details are taken care of for you with Auto Dose. ActiveIntelligence™ senses load size and soil level, Auto Dose delivers the right amount of detergent, and Active Mix blends it with water for a gentle, effective wash. Two FlexiDose reservoirs let you use detergent and softener, storing enough for up to 21 washes when both are used for detergent, or specialised formulas — ideal for Silk, with it's delicate protein fibres that weaken when wet and need extra care to maintain softness and sheen.

FABRIC CARE ON YOUR TERMS

Crease Free gives you flexibility to unload laundry when it suits you. Ideal for Down, which can clump and compress when wet, Crease Free gently tumbles the load while damp to separate and loosen fibres, preserving the natural loft and softness of garments and bedding. Drum Dry completes the care cycle by quietly circulating air to fully dry the drum. Simply close the door and the machine will be dry and ready for the next load when you are.

REFRESH WITH STEAM

Gently relax fibres to reduce wrinkles and odours with Steam Refresh. By applying just the right amount of steam without fully saturating garments, it preserves Linen's natural breathability and flexibility, which can be affected by repeated wetting and drying at high temperatures. Steam Refresh revives softness and drape, keeping garments airy and refreshed between washes.

CLASS-LEADING EFFICIENCY

Designed to reduce running costs and environmental impact with 5-star energy and 5-star water ratings, you can trust that your fabric care routine is both effective and sustainable. The SmartDrive™ motor ensures quiet operation and long-lasting reliability, with fewer moving parts for reduced wear over time.

SPECIFICATIONS

Capacity

Capacity	12 kg

Connected Features

Alerts and notifications	•
Education and onboarding	•
Initial software update for full feature set	•
Monitoring	•
Remote operation	•
Software updates	•

Consumption

Energy rating	5 star
Energy usage	275kWh/year
Rated capacity (AU NZ only)	12
Water consumption per cycle	86L
Water rating	5 star (WELS)

Controls

Adjustable audio and display settings	•
Interface type	7" touchscreen
Screen brightness settings	•
Two button start compliant	•

Features

Active Mix	•
Add a garment (immediate door opening)	•
Advanced out of balance detection	•
Anti-Bacteria Treatment (ABT)	•
Anti-fungal door gasket	•
Auto out of balance correction	•
Automatic water level	•
Controlled cold	•
Crease Free	•
Delay start	•
Detergent dispenser	Flexi Dose
Drum dry	•
Excess suds detection	•
Extra large door	•
Extra Rinse	•
Fabric softener dispenser	Auto Dose
Favourite mode	Multiple
Flood protection	•
Front and back levelling feet	•
Interior light	•
Keylock	•
Optimise Wash	•
Pre Wash Cold	•
Pre Wash Warm	•
Progress indicator	•
Push to open dispenser	•
Quiet mode	•
Reverse tumbling	Full reverse tumbling
Smart appliance	•
Soak	•
Stainless steel drum	•
Time saver function	•
Time to go	•
Water supply	Hot & Cold

Performance

ActiveIntelligence™ technology	•
Auto colour sensing	•
Auto load sensing	•
Auto soil sensing	•
Maximum spin speed	1400 rpm
Motor type	Direct Drive
Number of spin speeds	5
SmartDrive™ technology	•
Vortex wash	•

Product dimensions

Depth	661 mm
Height	850 mm
Width	602 mm

SKU 92314

The product dimensions and specifications in this page apply to the specific product and model. Under our policy of continuous improvement, these dimensions and specifications may change at any time. You should therefore check with Fisher & Paykel's Customer Care Centre to ensure this page correctly describes the model currently available. © Fisher & Paykel Appliances Ltd 2020

Other product downloads available at fisherpaykel.com

- DWG
- DXF
- Energy Label
- Installation Guide - Side by Side (English)
- Installation Guide - Stacked (English)
- Installation Guide (English)
- Planning Guide - Fabric Care Solutions (English)
- Revit
- Rhino
- Introducing Fabric Care Solutions (English)
- Sketchup
- User Guide - Multiple Product Setup (English)
- User Guide (English)

Where applicable:

All appliances use energy, and energy usage typically generates carbon emissions. **Fisher & Paykel Appliances' In-use Energy Carbon Emissions Estimate** indicates carbon emissions from a product's in-use energy. This is calculated either annually or per cycle, using the product's market-specific energy label energy consumption data multiplied by the carbon emissions factor for energy in your country or region.

Our In-use Energy Carbon Emissions Estimate is designed to assist customers in making informed purchasing decisions when comparing different Fisher & Paykel products. For example, a heat pump dryer typically has a lower In-use Energy Carbon Emissions Estimate than a vented dryer.

24/7

A PEACE OF MIND SALE
24 Hours 7 Days a Week Customer Support
T 0800 372 273 Wwww.fisherpaykel.com