Series 9, Contemporary Tall Single DishDrawer Dishwasher

Series 9 | Contemporary

Stainless Steel



Created with extra height for large dishes and designed to be placed anywhere in your kitchen, for loading dishes with minimal bending.

- Designed to be installed under your benchtop, with a recessed handle for a seamless look
- Six wash programs, as well as additional Quick wash, Sanitise and Extra Dry modifiers
- With extra height for taller dishes, and customisable internal shelving
- Wi-Fi enabled and works with the SmartHQ™ app for remote control and notifications

DIMENSIONS

Height	454 mm
Width	599 mm
Depth	573 mm

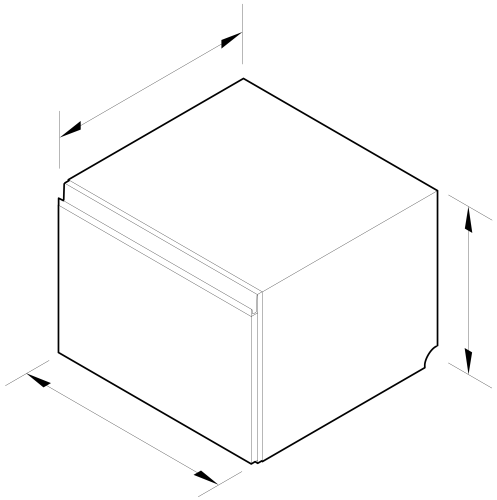

FEATURES & BENEFITS

Seamless Fit

Our built-under DishDrawer™ Dishwashers are installed flush under your benchtop with the option of a custom kickstrip, ensuring minimal gaps. Designed to match the Fisher & Paykel family of kitchen appliances with a recessed handle for a streamlined look.

Designed For Real Life

Designed to make everyday life simpler, DishDrawer™ Dishwashers can be distributed throughout the kitchen to support patterns of use. As easy to open and close as kitchen drawers, they can be conveniently positioned at bench height for ease of loading and minimal bending.

Easy To Load

Designed to fit seven place settings, with foldable racking to fit taller dishes up to 310mm. Flexible racking allows you to make adjustments to fit in a variety of dishes.

Quick, Sanitise And Extra Dry Options

The Quick wash modifier delivers a faster wash while maintaining performance. The Sanitise option provides extra protection, killing 99.9% of bacteria* in the final rinse. The Extra Dry setting is perfect for plastic dishes.

*Certified to NSF/ANSI Standard 184

Quiet Performer

Running at a very low decibel rating, these DishDrawer™ Dishwashers do their job without making a fuss. The combination of intelligent technology and simple mechanics means greater reliability and excellent wash performance.

Designed To Match

DishDrawer™ Dishwashers are designed to match the Fisher & Paykel family of kitchen appliances, with matching handles, premium styling and quality materials for a stylish finish in your kitchen.

SPECIFICATIONS

Accessories (included)

Cutlery basket	•
Knife clip and multipurpose clip	•

Capacity and loading

Accommodates round plates up to	310mm
Adjustable height, foldable cupracks	•

Fold down tines	•
Pitch adjustable tines	•
Place settings per drawer	7
Place settings per drawer	7

Connected Features

Alerts and notifications	•
Education and onboarding	•
Monitoring	•
Software updates	•

Consumption

Energy rating	3.5 star
Energy usage	136 kWh/year
In-use energy carbon emissions estimate	12.9kgCO2e/year
Water consumption (per wash cycle)	6.9L
Water rating	4.5 star (WELS)

Controls

End of cycle beeps	•
Energy saving delay start option of up to 12 hours	•
Internal wash selector	•
Keylock	•
Knock to pause	•
Rinse aid indicator light	•
Smart appliance	•

Features

Fan assisted drying	•
Flood protection	•
Flow through detergent dispenser	•
Motor type	BLDC
Quiet operation	•
SmartDrive™ technology	•

Performance

Noise emissions	42 dBA

Power requirements

Dedicated Circuit (A)	5A
Supply frequency	50 Hz
Voltage	220 - 240V

Product dimensions

Depth	573 mm
Height	454 mm
Width	599 mm

Wash Program Modifiers

Extra Dry	•
Quick	•
Sanitise	•
Wash modifiers	3

Wash Programs

Delicate	•
Eco	•
Fast	•
Heavy	•
Medium	•
Rinse	•
Wash programs	6

Water connection

Water pressure	30kPa - 1000 kPa
Water supply	3/4" BSP (20mm) Connector Water Inlet Hose

SKU 82883

The product dimensions and specifications in this page apply to the specific product and model. Under our policy of continuous improvement, these dimensions and specifications may change at any time. You should therefore check with Fisher & Paykel's Customer Care Centre to ensure this page correctly describes the model currently available. © Fisher & Paykel Appliances Ltd 2020

Other product downloads available at fisherpaykel.com

- DXF
- Care & Maintenance (English)
- DWG
- Energy Label
- First Use (English)
- Installation Guide (English)
- Revit
- Rhino
- SketchUp
- User Guide (English)
- Wash Program Data (English)

Where applicable:

All appliances use energy, and energy usage typically generates carbon emissions. **Fisher & Paykel Appliances' In-use Energy Carbon Emissions Estimate** indicates carbon emissions from a product's in-use energy. This is calculated either annually or per cycle, using the product's market-specific energy label energy consumption data multiplied by the carbon emissions factor for energy in your country or region.

Our In-use Energy Carbon Emissions Estimate is designed to assist customers in making informed purchasing decisions when comparing different Fisher & Paykel products. For example, a heat pump dryer typically has a lower In-use Energy Carbon Emissions Estimate than a vented dryer.



A PEACE OF MIND SALE
24 Hours 7 Days a Week Customer Support

T 0800 372 273 **W**www.fisherpaykel.com