90cm Series 9 Classic 5 Zone Induction Pyrolytic Cooker

Series 9 | Classic

Black



With large oven and cooktops that can be paired to create an expansive cook zone, this freestanding cooker is made for those who love to cook.

- Five cooking zones that can be bridged to form SmartZones
- Convection oven with 140L total capacity, nine oven functions plus rotisserie, including Pastry Bake with pizza mode and rapid proof for making bread
- Non-tip full-extension shelves for safe removal of hot dishes
- High-temperature self-cleaning function breaks down food residue for an easy clean

DIMENSIONS

Height	898 - 946 mm
Width	897 mm
Depth	600 mm

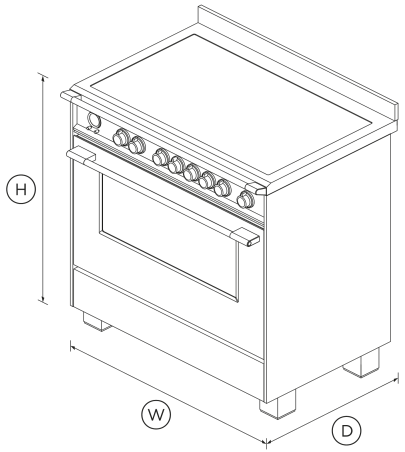

FEATURES & BENEFITS

Multi-Shelf Cooking

Our AeroTech™ system circulates air evenly throughout the entire oven so dishes on the top shelf turn out just as perfectly as food cooking on the bottom shelf.

Quality And Durability

Every detail has been carefully crafted. The solid, perfectly balanced soft-close door, durable cooktop and glowing halo dials all add up to an exceptional, premium range.

Power & Control

Instant and immediate control from the highest to the gentlest heat. The finely tuned cooktop controls let you sear, stir fry or simmer a delicate sauce to perfection.

Easy To Clean

Cleaning up spills is effortless. Your cooktop simply needs a quick wipe to keep it looking good as new. The pyrolytic self-clean oven cycle breaks down food residue at a very high temperature, leaving a light ash that's easily removed with a damp cloth.

Complementary Design

Combining traditional aesthetics and modern performance, this Classic style freestanding range cooker is the perfect centrepiece for your unique kitchen design.

Large Capacity Oven

The generous 140L total capacity oven gives you plenty of space to cook multiple dishes at once.

Multi-Function Flexibility

No matter what you are cooking, you have the right heat to match thanks to nine oven functions plus Rotisserie, including Pastry Bake with Pizza Mode and Rapid Proof for making bread.

Large, Flexible Cooking Area

SmartZone links two cooking zones and controls them as one, giving you the flexibility to use large pans and griddles and easily handle bigger food items such as a whole fish.

SPECIFICATIONS

Accessories (included)

Flat wire shelf	1
Grill rack	1
Roasting dish	1
Rotisserie set	1 set
Step down wire shelf	•
Telescopic sliding runners	2 sets

Accessories (sold separately)

Kick strip, black (optional)	KICKOR90B1
Kick strip, red (optional)	KICKOR90R1
Kick strip, stainless steel (optional)	KICKOR90X1
Kick strip, white (optional)	KICKOR90W1

Capacity

Shelf positions	6
Total capacity	140 L
Usable capacity	120 L

Cleaning

Acid resistant graphite enamel	•
Drop down grill element	•
Flat easy clean glass surface	•
Pyrolytic self-clean	•
Removable oven door	•
Removable oven door inner glass	•
Removable shelf runners	•

Controls

Audio feedback	•
Automatic cooking/minute timer	•
Automatic pre-set temperatures	•
Celsius/Fahrenheit temperature	•
Electronic clock	•
High resolution display	•
Laser etched graphics	•
Precise electronic temperature control	•
Sabbath mode	•
Toughened fused glass graphics	•
Turned stainless steel clock buttons	•
Turned stainless steel clock crown (dial)	•

Installation Dimensions

Installation cutout dimensions (Depth)	600 mm
Installation cutout dimensions (Width)	900 mm

Oven features

AeroTech™ technology	•
Automatic rapid pre-heat	•
Bright chromed, cast zinc dials with illuminated halos	•
Convection	•
Electronic oven control	•
Full extension telescopic sliding shelves	•
Soft open/close door	•
Twin cavity fans	•
Warming drawer	•

Oven functions

Bake	•
Fan bake	•
Fan forced	•
Fan grill	•
Grill	•
Number of functions	9
Pastry Bake with Pizza mode	•
Rapid proof	•
Roast	•
Rotisserie	•

Oven performance

CoolTouch door	Quadruple glazed
Warming drawer power	202 W

Power requirements

Amperage	68 A
Supply frequency	50 Hz
Supply voltage	220 - 240 V

Product dimensions

Depth	600 mm
Height	898 - 946 mm
Width	897 mm

Rangetop features

Auto heat reduce	•
Dual colour display	•
Gentle heat	•
Heat settings	9
Hob rail	•
Hob rear trim	60 mm
Induction cooking technology	•
SmartZone	1
Zone bridging	•

Rangetop Performance

Centre	2300 W
Left front	1600 W
Left rear	2100 W
Number of cooking zones	5

PowerBoost	•

Safety

Advanced cooling system	•
Anti-tilt bracket	•
Balanced oven door	•
Catalytic venting system	•
Child lock	•
CoolTouch door	•
Full extension telescopic shelves	2 sets (part 578744)
Full extension telescopic sliding shelves	•
Non-tip shelves	•
Pan detection system	•
Safety time out	•
Spill containment	12 L
Spillage auto off	•
Surface hot indicators	•

SKU	81694

The product dimensions and specifications in this page apply to the specific product and model. Under our policy of continuous improvement, these dimensions and specifications may change at any time. You should therefore check with Fisher & Paykel's Customer Care Centre to ensure this page correctly describes the model currently available. © Fisher & Paykel Appliances Ltd 2020

Other product downloads available at fisherpaykel.com

- Installation Guide (English)
- Installation Guide - Kick Strip (English)
- Revit
- Rhino
- SketchUp
- User Guide (English)

Where applicable:

All appliances use energy, and energy usage typically generates carbon emissions. **Fisher & Paykel Appliances' In-use Energy Carbon Emissions Estimate** indicates carbon emissions from a product's in-use energy. This is calculated either annually or per cycle, using the product's market-specific energy label energy consumption data multiplied by the carbon emissions factor for energy in your country or region.

Our In-use Energy Carbon Emissions Estimate is designed to assist customers in making informed purchasing decisions when comparing different Fisher & Paykel products. For example, a heat pump dryer typically has a lower In-use Energy Carbon Emissions Estimate than a vented dryer.

24/7

A PEACE OF MIND SALE
24 Hours 7 Days a Week Customer Support

T 0800 372 273 Wwww.fisherpaykel.com