# Freestanding Refrigerator Freezer, 63.5cm, 403L

Contemporary



With stylish contemporary design and generous, flexible storage for all your chilled and frozen foods.

- ActiveSmart™ technology helps keep food fresher for longer by constantly maintaining the ideal temperature.
- Spacious bottom freezer with easy-slide internal drawers to separate storage

## DIMENSIONS

| | |
|---|---|
| **Height** | **1715 mm** |
| **Width** | **635 mm** |
| **Depth** | **695 mm** |

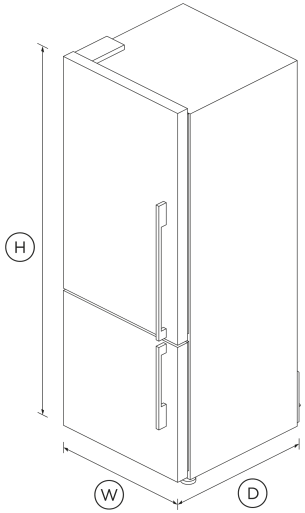


## SPECIFICATIONS

### Capacity

| | |
|---|---|
| Volume | **380 L** |
| Volume freezer | **111 L** |
| Volume refrigerator | **269 L** |

### Features

| | |
|---|---|
| Adjustable door shelves | **4** |
| Adjustable glass shelves | **3** |
| Covered door shelves | **2** |
| Door alarm | • |
| Front levelling feet | • |
| Fruit and vegetable bins | **2** |
| Full extension runners | • |
| LED lighting | • |
| Rear rollers | • |
| Single bottle holders | **4** |
| SmartTouch control panel | • |

### Freezer Features

| | |
|---|---|
| Bottle chill | • |
| Door alarm | • |
| Fast freeze | • |
| Large plastic bins | • |
| Slide Out Pastry Tray | • |

### Performance

| | |
|---|---|
| ActiveSmart™ Foodcare | • |
| Adaptive defrost | • |
| Frost free | • |
| Frost free freezer | • |
| Inverter controlled compressor | • |
| R600a refrigerant | • |

### Product dimensions

| | |
|---|---|
| Depth | **695 mm** |
| Height | **1715 mm** |
| Width | **635 mm** |

### Variable Temp Compartment

| | |
|---|---|
| Bottle chill mode | • |

| | |
|---|---|
| SKU | 25512 |

The product dimensions and specifications in this page apply to the specific product and model. Under our policy of continuous improvement, these dimensions and specifications may change at any time. You should therefore check with Fisher & Paykel's Customer Care Centre to ensure this page correctly describes the model currently available. © Fisher & Paykel Appliances Ltd 2020

**Other product downloads available at fisherpaykel.com**

- Energy Label
- User Guide (English)

**Where applicable:**

All appliances use energy, and energy usage typically generates carbon emissions. **Fisher & Paykel Appliances' In-use Energy Carbon Emissions Estimate** indicates carbon emissions from a product's in-use energy. This is calculated either annually or per cycle, using the product's market-specific energy label energy consumption data multiplied by the carbon emissions factor for energy in your country or region.

Our In-use Energy Carbon Emissions Estimate is designed to assist customers in making informed purchasing decisions when comparing different Fisher & Paykel products. For example, a heat pump dryer typically has a lower In-use Energy Carbon Emissions Estimate than a vented dryer.

24/7

A PEACE OF MIND SALE

**24 Hours 7 Days a Week Customer Support**

**T** 0800 372 273 **W**www.fisherpaykel.com