76cm Series 9 Minimal Companion Trim Kit

Minimal

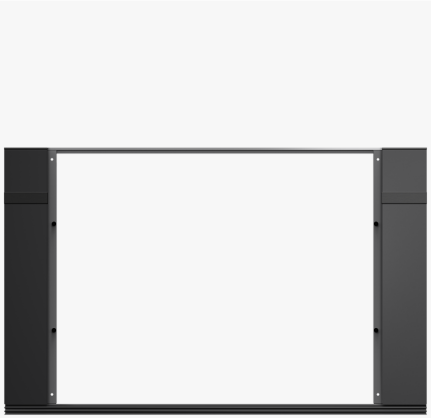

Allows our Built-in Coffee Maker (EB60DSXBB1), Combination Steam Oven (OS60NDBB1) or Combination Microwave Oven (OM60NDBB1), to be paired with the 76cm Oven.

- This is Minimal style, to pair with other Minimal style products

DIMENSIONS

Height	**478 mm**
Width	**757 mm**
Depth	**530 mm**

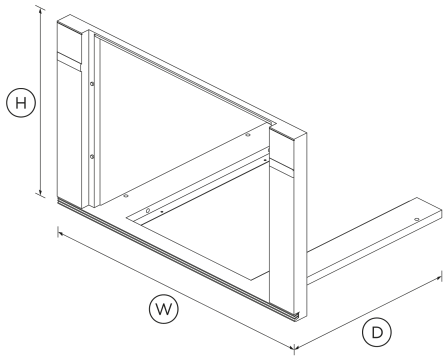

SPECIFICATIONS

Product dimensions

Depth	**530 mm**
Height	**478 mm**
Width	**757 mm**

SKU	81940

The product dimensions and specifications in this page apply to the specific product and model. Under our policy of continuous improvement, these dimensions and specifications may change at any time. You should therefore check with Fisher & Paykel's Customer Care Centre to ensure this page correctly describes the model currently available. © Fisher & Paykel Appliances Ltd 2020

Other product downloads available at fisherpaykel.com

- Installation Guide - Trim Kit (English)
- Installation Guide - Trim Kit (English)
- Planning Guide - Contemporary Black 76cm Built-in Ovens and Companions (English)

Where applicable:

All appliances use energy, and energy usage typically generates carbon emissions. **Fisher & Paykel Appliances' In-use Energy Carbon Emissions Estimate** indicates carbon emissions from a product's in-use energy. This is calculated either annually or per cycle, using the product's market-specific energy label energy consumption data multiplied by the carbon emissions factor for energy in your country or region.

Our In-use Energy Carbon Emissions Estimate is designed to assist customers in making informed purchasing decisions when comparing different Fisher & Paykel products. For example, a heat pump dryer typically has a lower In-use Energy Carbon Emissions Estimate than a vented dryer.

24/7

A PEACE OF MIND SALE

24 Hours 7 Days a Week Customer Support

T 0800 372 273 **W**www.fisherpaykel.com