# Integrated Dishwasher

Integrated



Designed to be integrated seamlessly into your surrounding cabinetry, with superior wash performance.*

- Customise with your own front panel and handle to match your kitchen cabinetry
- Six wash programs to suit any load, from Delicate to Heavy
- Auto option senses the optimum wash cycle for your dishes

## DIMENSIONS

| | |
|---|---|
| **Height** | **820 - 880 mm** |
| **Width** | **598 mm** |
| **Depth** | **552 mm** |

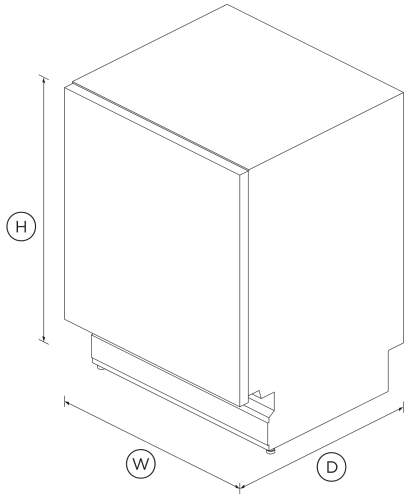


## FEATURES & BENEFITS

**Seamless Integration**

Customise your dishwasher with a panel and handle matching your cabinetry, for a seamless finish in your kitchen.

**Quiet performer**

Running at a very low decibel rating, this dishwasher does its job without making a fuss. The combination of clever technology and simple mechanics means greater reliability and superior wash performance.

**A quality wash**

The 3 stage filtration system delivers a superior clean. Cup racks, wine glass supports and utensil tray allow safe and easy cleaning of everyday items. A rinse aid indicator reminds you to top up for squeaky-clean dishes.

**Flexible wash options**

This dishwasher offers 6 wash programs including Auto, which automatically senses the optimal wash cycle for your dishes.

## SPECIFICATIONS

**Accessories (included)**

| | |
|---|---|
| Kickstrip | **true** |

**Accessories (sold separately)**

| | |
|---|---|
| Handle kit Classic | **AHCL-DDDW-24X** |
| Handle kit Contemporary round, aluminium | **AHS-OBDD-60S** |
| Handle kit Contemporary square fine, aluminium | **AHD5-OBDD-60SX** |
| Handle kit Contemporary square fine, black | **AHD5-OBDD-60SB** |
| Handle kit Contemporary square, aluminium | **AHD3-OBDD-60S** |
| Handle kit Contemporary square, black | **AHD3-OBDD-60B** |
| Handle kit Professional round flush | **AHP3-DWDD-60S** |

**Capacity and loading**

| | |
|---|---|
| Accommodates round plates up to | **300mm** |
| Adjustable height, foldable cupracks | • |
| Easy lift adjustable upper basket | • |
| Fold down tines | • |
| Place settings | **15** |
| Place settings | **15** |
| Wine glass supports | • |

**Consumption**

| | |
|---|---|
| Energy rating | **3.5 star** |
| Energy usage | **287kWh/year** |
| In-use energy carbon emissions estimate | **175.1kgCO2e/year** |
| Water consumption (per wash cycle) | **11.6L** |
| Water rating | **5 star (WELS)** |

### Controls

| | |
|---|---|
| End of cycle beeps | • |
| Energy saving delay start option of up to 12 hours | • |
| Keylock | • |
| Rinse aid indicator light | • |

### Features

| | |
|---|---|
| Half load option | • |
| Quiet operation | • |
| ThermoDry system | • |
| Three-stage filtration system | • |
| Variable wash pressure technology | • |

### Performance

| | |
|---|---|
| Noise emissions | **48 dBA** |

### Power requirements

| | |
|---|---|
| Amperage | **10A** |
| Supply frequency | **50Hz** |
| Supply voltage | **220 - 240V** |

### Product dimensions

| | |
|---|---|
| Depth | **552 mm** |
| Height | **820 - 880 mm** |
| Width | **598 mm** |

### Wash Programs

| | |
|---|---|
| Auto | • |
| Eco | • |
| Fast | • |
| Heavy | • |
| Medium | • |
| Rinse | • |
| Wash programs | **6** |

### Water connection

| | |
|---|---|
| Water pressure | **30kPa - 1000 kPa** |
| Water supply | **3/4" BSP (20mm) Connector Water Inlet Hose** |

| | |
|---|---|
| SKU | 81202 |

The product dimensions and specifications in this page apply to the specific product and model. Under our policy of continuous improvement, these dimensions and specifications may change at any time. You should therefore check with Fisher & Paykel's Customer Care Centre to ensure this page correctly describes the model currently available. © Fisher & Paykel Appliances Ltd 2020

**Other product downloads available at fisherpaykel.com**

- DWG
- DXF
- Data Sheet (English)
- Energy Label
- Installation Guide (English)
- Installation Guide (English)
- Quick Start Guide (English)
- User Guide (English)

**Where applicable:**

All appliances use energy, and energy usage typically generates carbon emissions. **Fisher & Paykel Appliances' In-use Energy Carbon Emissions Estimate** indicates carbon emissions from a product's in-use energy. This is calculated either annually or per cycle, using the product's market-specific energy label energy consumption data multiplied by the carbon emissions factor for energy in your country or region.

Our In-use Energy Carbon Emissions Estimate is designed to assist customers in making informed purchasing decisions when comparing different Fisher & Paykel products. For example, a heat pump dryer typically has a lower In-use Energy Carbon Emissions Estimate than a vented dryer.

24/7

A PEACE OF MIND SALE

**24 Hours 7 Days a Week Customer Support**

**T** 1300 650 590 **W**www.fisherpaykel.com