13cm Series 11 Modular Auxiliary Downdraft Extractor

Series 11 | Minimal

Grey

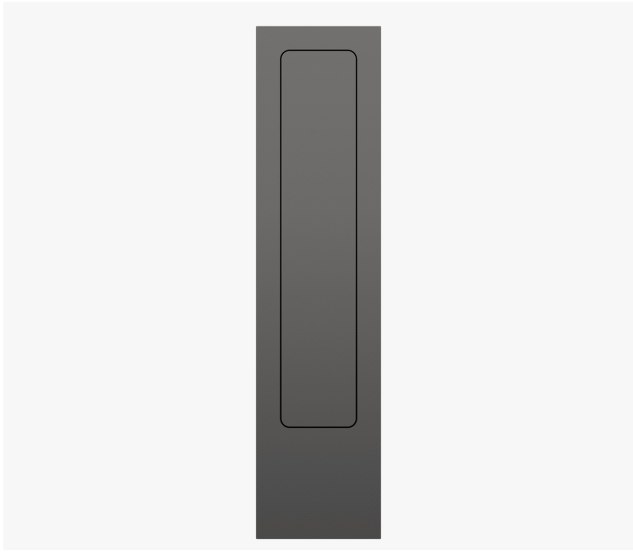

With powerful extraction, this ventilation module fits seamlessly into your benchtop. Combine with our Primary Induction Cooktop and other modular cooktops for the ultimate culinary solution.

- Part of our unique modular cooking solution. Pair with a primary cooktop for a unified cooking experience
- Seamless kitchen integration, without the need for overhead ventilation
- Links to adjacent cooktop modules, with automatic extraction at the right speed to suit your cooking
- With five fan speeds and a boost function for effective removal of odours and steam

DIMENSIONS

Height	186 mm
Width	130 mm
Depth	530 mm

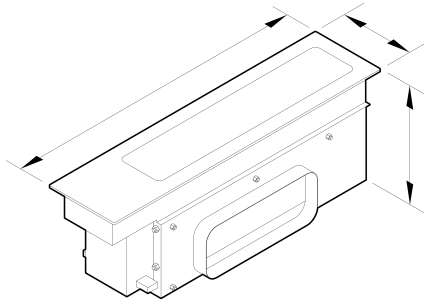

FEATURES & BENEFITS

Modular Design Freedom

Enhance your cooking space with downdraft ventilation. These modules can be discreetly positioned alongside your primary cooktop and auxiliary modules, ensuring a fresh environment regardless of your chosen cooking method. Tailor your setup to reflect the way you live, cook, and entertain.

Sleek And Subtle

Redefine your kitchen's aesthetic with the downdraft ventilation module. Seamlessly integrated into the countertop and alongside cooktop modules, it allows for an open-style, social kitchen. Choose from elegant black glass or subtle grey glass finishes that complement your kitchen's design.

Design Versatility

Ideal for layouts where traditional overhead hoods pose challenges, this ventilation module pairs beautifully with island cooktops and open kitchens. Its ability to retract or hide ensures a cleaner, more open appearance, enhancing your kitchen's functionality and design.

Intuitive Extraction

Simply open the cover and enjoy convenient extraction with Link Mode. The fan intuitively activates, adjusting its speed according to the power levels of nearby cooktop zones, eliminating the need for manual adjustments. Even after you have finished cooking, the fan remains active to capture any remaining vapours.

Quiet Efficiency

The auxiliary ventilation module operates efficiently and discreetly in the background, seamlessly controlled via the primary module touchscreen. With five fan speeds plus a boost function, it quickly removes steam, odours, and grease.

Prolonged Freshness

A Delayed Off timer ensures that cooking smells continue to be extracted even after you've finished cooking. Additionally, the timer will automatically shut off the ventilation after a preset time, reducing energy waste if you forget to turn it off.

Easy To Clean

The nine-layer filter effectively traps grease particles during extraction. Designed for simple removal, the filters are easy to clean and dishwasher safe.

SPECIFICATIONS

Fan ratings

Maximum air movement	573 m³/hr
Maximum sound rating	75 dBA

Speed 1 sound rating	42 dBA

Installation and cleaning

Air outlet size	222 x 89 mm
Dishwasher safe filters	1
Recirculation	Optional
Stainless steel filter cover	•

Performance

Extraction type	Surface
Fan speeds	5 + Boost
Fan speeds + boost	•
Filter type	Mesh with Stainless Steel filter cover
Number of filters	1

Power requirements

Supply frequency	50 Hz
Supply voltage	220-240 V
Total Power	167 W

Product dimensions

Depth	530 mm
Height	186 mm
Width	130 mm

Ventilation features

Auto-off/Run-on timer	•
Modular compatibility	Auxiliary
Modular design	•
Smart appliance	•

SKU	85723

The product dimensions and specifications in this page apply to the specific product and model. Under our policy of continuous improvement, these dimensions and specifications may change at any time. You should therefore check with Fisher & Paykel's Customer Care Centre to ensure this page correctly describes the model currently available. © Fisher & Paykel Appliances Ltd 2020

Other product downloads available at fisherpaykel.com

- DWG
- DXF
- Installation Guide - Multiple Product with Downdraft Ventilation (English)
- Planning Guide (English)
- Revit
- Rhino - Ducted Left
- Rhino - Ducted Right
- SketchUp - Ducted Left
- SketchUp - Ducted Right
- User Guide (English)

Where applicable:

All appliances use energy, and energy usage typically generates carbon emissions. **Fisher & Paykel Appliances' In-use Energy Carbon Emissions Estimate** indicates carbon emissions from a product's in-use energy. This is calculated either annually or per cycle, using the product's market-specific energy label energy consumption data multiplied by the carbon emissions factor for energy in your country or region.

Our In-use Energy Carbon Emissions Estimate is designed to assist customers in making informed purchasing decisions when comparing different Fisher & Paykel products. For example, a heat pump dryer typically has a lower In-use Energy Carbon Emissions Estimate than a vented dryer.

24/7

A PEACE OF MIND SALE
24 Hours 7 Days a Week Customer Support
T 0800 372 273 Wwww.fisherpaykel.com