10kg Series 7 Contemporary Heat Pump Dryer, Woolmark Black

Series 7 | Heat Pump

Graphite



An advanced Heat Pump Dryer with a rich, responsive interface. Intuitive controls and extra flexibility bring simplicity and convenience to every cycle.

- Advanced care for 6 fibre types, including Down and Wool
- Wide temperature range for ideal drying conditions
- Woolmark Black certified for machine-washable woollens
- Connect SmartHQ™ for notifications, guides and extra functions

DIMENSIONS

Height	850 mm
Width	602 mm
Depth	682 mm

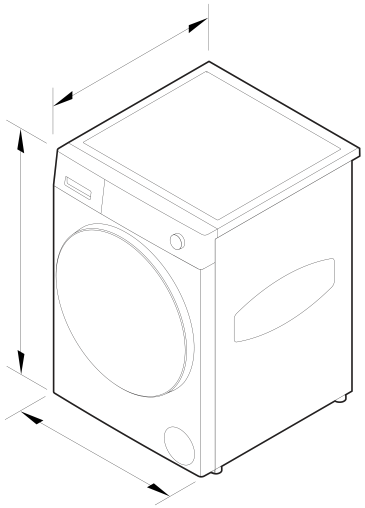

FEATURES & BENEFITS

ADVANCED CARE FOR EVERYDAY

Fisher & Paykel Series 7 Dryers put control at your fingertips with a vivid 3.7” display and dial, for effortless fabric care with every load. Gentle Heat Pump technology dries at lower temperatures to protect fibres and reduce energy use. Each fibre’s molecular structure affects how moisture moves and evaporates, so Fibre-Led cycles including Down, Elastane, and Woolmark Black certified Wool are precisely tuned to the ideal temperature and duration, helping preserve softness, shape and longevity.

HEAT PUMP TECHNOLOGY

Heat Pump technology combines advanced temperature control and moisture sensing for gentle, energy-efficient drying. Now with a temperature range four times greater than our previous technology, cycles are finely tuned to the natural moisture of each fibre. For dense fibres like Down, low-temperature cycles ensure thorough, even drying while preserving loft and insulating properties.

STEAM REFRESH

Gently refresh Down garments, like jackets or duvets, with Steam Refresh. Using just the right about of moisture, temperature and movement, Steam Refresh encourages fibres to relax and regain their loft, restoring shape, softness and fluffiness after wear. Out of the dryer, your garment is dry, refreshed and ready to wear, maintaining its natural comfort and feel—without a full wash.

PROTECT ACTIVE WEAR FROM TANGLING

Protect the stretch, shape and supportive fit of delicate fibres like Elastane with TangleProtect, which keeps garments moving freely through alternating drum motion for gentle, even drying. This ensures activewear and fitted pieces maintain their elasticity, shape, and supportive fit.

GENTLE DRYING FOR WOOL

Woolmark Black certified cycles provide specialist drying for machine-washable Wool without shrinking or stretching. Our precisely tuned cycles protect Wool fibres as they dry, preventing heat or movement from altering their shape, while preserving the natural structure, softness, and fit of every garment.

TAILORED DRYING FROM DENIM TO TOWELS

Even though both are made from Cotton, Denim and Towels have very different care needs. Our dedicated Item Types ensure Towels are dried evenly to keep them soft, warm, and fully dry, while Denim is dried at the optimal temperature to preserve colour and elasticity and prevent creases or shrinkage. By considering each item’s unique characteristics, we ensure gentle, even drying that maintains fabric quality and performance.

REFINED FORM, INTUITIVE FUNCTION

Our most perfect pair yet, reimagined for modern living. With an angled, 3.7" full-colour interface and dial, plus a newly positioned lint filter on the dryer it offers a seamless fabric care experience, elevated beyond the utility space. Designed to complement one another in both form and function, our Front Loader Washers and Heat Pump Dryers feature refined materials, large doors and complementary cycles that work in harmony to care for a wide range of fibres.

SPECIFICATIONS

Accessories (included)

Drying rack	•

Capacity

Total capacity	10 kg

Connected Features

Alerts and notifications	•
Education and onboarding	•
Monitoring	•
Remote operation	•
Software updates	•

Consumption

Energy rating	9 star
Energy usage	142kWh/year
In-use energy carbon emissions estimate	12.8kgCO2e/year

Controls

Beeps on/off function	•
Interface type	LCD display with dial
Screen brightness settings	•

Features

Clean condenser filter reminder	•
Clean door lint filter reminder	•
Crease Free	•
Drain Hose	•
Drum light	•
Easy access lint filter	•
Easy clean condenser filter	•
End of cycle signal	•
Favourite cycle	Multiple
Front and back levelling feet	•
Iron ready alert	•
Keylock	•
No external venting	•
Removable water tank	•
Reversible door	•
Smart appliance	•
Stainless steel drum	•
Water tank full indicator	•
Woolmark certified	Woolmark Black

Performance

Auto sensing	•
Compressor type	Fixed speed
Delay start	•
Dryness settings	4
Heat pump technology	•
Refrigerant type	R290
Reverse tumbling	Full reverse tumbling
TangleProtect	•
Time dry	•

Product dimensions

Depth	682 mm
Height	850 mm
Width	602 mm

SKU	93327

The product dimensions and specifications in this page apply to the specific product and model. Under our policy of continuous improvement, these dimensions and specifications may change at any time. You should therefore check with Fisher & Paykel's Customer Care Centre to ensure this page correctly describes the model currently available. © Fisher & Paykel Appliances Ltd 2020

Other product downloads available at fisherpaykel.com

- DWG
- DXF
- Energy Label
- Installation Guide - Dryer (English)
- Installation Guide - Side by Side (English)
- Performance Guide (English)
- Planning Guide (English)
- Revit
- Rhino
- Introducing Fabric Care Solutions (English)
- Sketchup
- User Guide (English)

Where applicable:

All appliances use energy, and energy usage typically generates carbon emissions. **Fisher & Paykel Appliances' In-use Energy Carbon Emissions Estimate** indicates carbon emissions from a product's in-use energy. This is calculated either annually or per cycle, using the product's market-specific energy label energy consumption data multiplied by the carbon emissions factor for energy in your country or region.

Our In-use Energy Carbon Emissions Estimate is designed to assist customers in making informed purchasing decisions when comparing different Fisher & Paykel products. For example, a heat pump dryer typically has a lower In-use Energy Carbon Emissions Estimate than a vented dryer.



A PEACE OF MIND SALE
24 Hours 7 Days a Week Customer Support

T 0800 372 273 **W**www.fisherpaykel.com