Single DishDrawer Dishwasher, Tall, Sanitize

Professional



Designed to fit your full-sized dinner plates, this DishDrawer™ can be placed anywhere in your kitchen, for loading dishes with less bending.

- Six wash programs, as well as additional Quick wash, Sanitize and Extra Dry options
- American Disabilities Act (ADA) compliant, this can be installed at an accessible height for loading and unloading.
- Flexible racking can be folded down to fit bigger dishes

DIMENSIONS

Height	**17 7/8 "**
Width	**23 9/16 "**
Depth	**22 3/4 "**

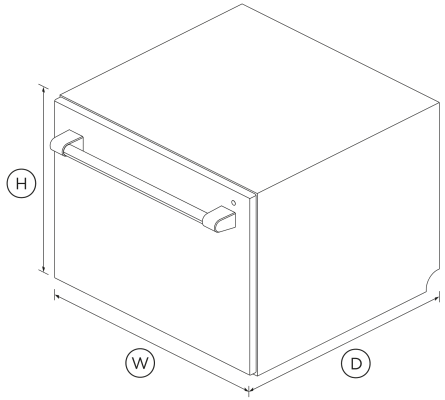

FEATURES & BENEFITS

Ease of use

DishDrawer™ Dishwashers are as easy to open and close as kitchen drawers and can be conveniently positioned at bench height for ease of loading and minimal bending. Flexible racking allows you to make adjustments to fit in a variety of dishes.

Complementary design

DishDrawer™ Dishwashers can be installed in any kitchen space and are designed to match the Fisher & Paykel family of kitchen appliances, with matching handles, premium styling and quality materials.

Quick, Sanitize and Extra Dry options

The Quick wash modifier delivers a faster wash while maintaining performance. The Sanitize option provides extra protection killing 99.9% of bacteria in the final rinse. The Extra Dry setting is perfect for plastic dishes.

Quiet performer

Running at a very low decibel rate, these DishDrawer™ Dishwashers do their job without making a fuss. The combination of intelligent technology and simple mechanics means greater reliability and excellent wash performance.

SPECIFICATIONS

Accessories (included)

Cutlery basket	•
Kickstrip	**true**

Capacity and loading

Accommodates round plates up to	**12.25"**
Adjustable height, foldable cupracks	•
Fold down tines	•
Pitch adjustable tines	•
Place settings	**7**
Place settings	**7**

Connected Features

Alerts and notifications	•
Education and onboarding	•
Monitoring	•
Software updates	•

Consumption

Energy rating	**Energy Star**
Energy usage	**144kWh/year**
In-use energy carbon emissions estimate	**16.6kgCO2e/year**
Water usage (per wash cycle)	**1.64 gal**

Controls

Electronic fault/Diagnostic indicator	•
End of cycle beeps	•
Energy saving delay start option of up to 12 hours	•
Internal wash selector	•
Keylock	•
One button start	•
Rinse aid indicator light	•
Smart appliance	•

Features

Fan assisted drying	•
Flood protection	•
Flow through detergent dispenser	•
Motor type	**BLDC**
Quiet operation	•
SmartDrive™ technology	•

Performance

Noise emissions	**42 dBA**

Power requirements

Amperage	**5A**
Electric circuit	**3**
Rated current	**15 A**
Supply frequency	**60Hz**
Supply voltage	**100 - 120V**

Product dimensions

Depth	**22 3/4 "**
Height	**17 7/8 "**
Width	**23 9/16 "**

Safety and compliance

ADA compliant	•

Wash Program Modifiers

Extra Dry	•
Quick	•
Sanitise	•
Wash modifiers	**3**

Wash Programs

Delicate	•
Eco	•
Fast	•
Heavy	•
Medium	•
Rinse	•
Wash programs	**6**

Water connection

Inlet water temperature	**Max 140 °F**
Supplied hose to suit 3/8" (9mm) male compression fitting	•
Water pressure	**30kPa - 1000 kPa**
Water supply	**3/8" to suit Male Compression Fitting**

SKU 82757

The product dimensions and specifications in this page apply to the specific product and model. Under our policy of continuous improvement, these dimensions and specifications may change at any time. You should therefore check with Fisher & Paykel's Customer Care Centre to ensure this page correctly describes the model currently available. © Fisher & Paykel Appliances Ltd 2020

Other product downloads available at fisherpaykel.com

- Installation Guide (English)
- Installation Guide (English)
- Quick Start Guide (Canadian French)
- Revit
- Rhino
- SketchUp
- User Guide (English)
- Installation Video

Where applicable:

All appliances use energy, and energy usage typically generates carbon emissions. **Fisher & Paykel Appliances' In-use Energy Carbon Emissions Estimate** indicates carbon emissions from a product's in-use energy. This is calculated either annually or per cycle, using the product's market-specific energy label energy consumption data multiplied by the carbon emissions factor for energy in your country or region.

Our In-use Energy Carbon Emissions Estimate is designed to assist customers in making informed purchasing decisions when comparing different Fisher & Paykel products. For example, a heat pump dryer typically has a lower In-use Energy Carbon Emissions Estimate than a vented dryer.



A PEACE OF MIND SALE

24 Hours 7 Days a Week Customer Support

T 1.888.936.7872 **W**www.fisherpaykel.com