Oven, 60cm, 7 Function

Contemporary



With generous capacity and beautiful contemporary styling, this built-in oven will complement your kitchen design perfectly.

- 85L total capacity
- Seven oven functions including Pizza Bake
- Optional non-tip, full-extension shelves for safe removal of hot dishes

DIMENSIONS

Height	**598 mm**
Width	**596 mm**
Depth	**565 mm**

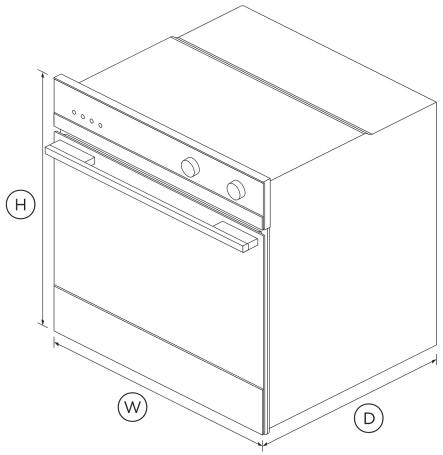

FEATURES & BENEFITS

Multi-function Flexibility

This built-in oven has seven functions including Bake, Fan Bake and Pizza Bake, allowing you to use a variety of cooking styles.

Generous capacity

Designed for multi-shelf cooking, this built-in oven has a total capacity of 85L allowing you to create several dishes at once.

Consistently hot

Ideal for multi-shelf cooking, this built-in oven features AeroTech™ - a technology that circulates heat evenly.

Fast and Easy Cleaning

Cleaning this built-in oven is quick and easy thanks to the catalytic liners which absorb oil and fat splashes during cooking.

Refined styling

With sophisticated handle styling and a white or brushed stainless steel finish, our built-in ovens are designed to match the rest of Fisher & Paykel's kitchen appliance family.

Safe and sound

The CoolTouch door of this built-in oven is safe to touch from the outside. Sturdy, fully extendable shelves slide all the way out, reducing the need for you to reach inside.

SPECIFICATIONS

Accessories (included)

Catalytic panels	•
Chromed shelf runners	•
Full extension sliding shelves	**Optional (part 565048)**
Roasting dish	**1**
Step down wire shelf	**1**
Telescopic sliding runners	**2 sets**

Accessories (sold separately)

Optional Accessory round handle	**Part 81645**
Optional round handle	**Part 81645**

Capacity

Shelf positions	**6**
Total capacity	**85 L**

Usable capacity	**72 L**

Cleaning

Acid resistant graphite enamel	•
Removable oven door	•
Removable oven door inner glass	•
Removable side ladders	•

Controls

Automatic cooking/minute timer	•
Electronic clock	•

Functions

Bake	•
Classic bake	•
Fan bake	•
Fan forced	•
Fan grill	•
Grill	•
Number of functions	**7**
Pastry Bake with Pizza mode	•
Pizza bake	•

Performance

AeroTech™ technology	•
Grill power	**3000 W**
Whisper quiet cooking	•

Power requirements

Amperage	**15 A**
Supply frequency	**50 Hz**
Supply voltage	**220 - 240 V**

Product dimensions

Depth	**565 mm**
Height	**598 mm**
Width	**596 mm**

Safety

Balanced oven door	•
CoolTouch door	•
Non-tip shelves	•

SKU	81743

The product dimensions and specifications in this page apply to the specific product and model. Under our policy of continuous improvement, these dimensions and specifications may change at any time. You should therefore check with Fisher & Paykel's Customer Care Centre to ensure this page correctly describes the model currently available. © Fisher & Paykel Appliances Ltd 2020

Other product downloads available at fisherpaykel.com

- DWG
- DXF
- Data Sheet (English)
- Installation Guide (English)

Where applicable:

All appliances use energy, and energy usage typically generates carbon emissions. **Fisher & Paykel Appliances' In-use Energy Carbon Emissions Estimate** indicates carbon emissions from a product's in-use energy. This is calculated either annually or per cycle, using the product's market-specific energy label energy consumption data multiplied by the carbon emissions factor for energy in your country or region.

Our In-use Energy Carbon Emissions Estimate is designed to assist customers in making informed purchasing decisions when comparing different Fisher & Paykel products. For example, a heat pump dryer typically has a lower In-use Energy Carbon Emissions Estimate than a vented dryer.

24/7

A PEACE OF MIND SALE

24 Hours 7 Days a Week Customer Support

T 0800 372 273 **W**www.fisherpaykel.com