Front Load Washer, 2.4 cu ft



A compact washer with multiple cycles including Sanitize, plus a Quick 30 minute cycle to save you precious time

- 13 wash cycles including Sanitize, Sports and Wool wash
- 1400 RPM spin speed means more water is extracted from your items, resulting in a shorter dry cycle
- Energy Star certified

DIMENSIONS

Height	**33 1/4 - 33 5/8 "**
Width	**23 7/16 "**
Depth	**25 3/8 "**

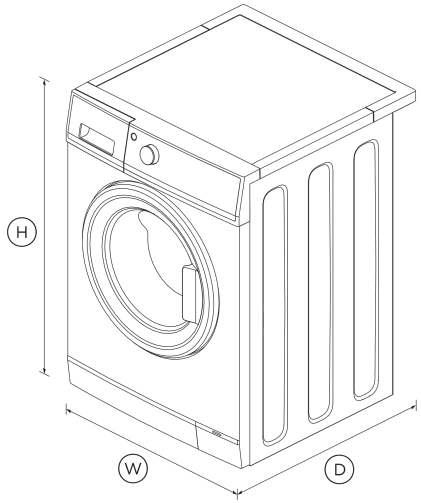

FEATURES & BENEFITS

SmartDrive(TM) technology

SmartDrive™ Technology is a gentle, quiet, and efficient combination of smart electronics and a direct drive motor that senses the load to deliver better fabric care.

Large capacity

This Fisher & Paykel compact washer can wash up to 2.4 cubic feet per cycle, reducing the number of times you have to run your machine and saving precious time.

Add a Garment

The Add a Garment feature allows you to quickly add or remove any size garment mid cycle. Simply press the Add a Garment button and the door will unlock. If the drum water is too high, just enough will be drained out before the door is unlocked.

13 fabric care cycles

13 wash cycles are available to cater for every type of wash that your household will require including Handwash, Sports and Sanitize cycles.

Energy star certified

Our SmartDrive™ Front Loaders are Energy Star certified, making them some of the most efficient front loaders on the market.

Sanitize wash

A cycle designed to provide extra security – the wash temperature reaches a heat that kills any additional bacteria hanging around.

SPECIFICATIONS

Accessories (sold separately)

Stacking Kit	•

Capacity

Capacity	**2.4 kg**
Capacity	**2.4 cu ft**

Consumption

Energy rating	**Energy Star**

Features

Add a garment (immediate door opening)	•
Anti-fungal door gasket	•
Auto out of balance correction	•
Child/Keylock	•

Delay start	•
Eco rinse	•
Extra Rinse	•
Flood protection	•
Hot and cold water inlets	•
No Spin / Spin hold	•
Pre Wash	•
Progress indicator	•
SmartTouch™ control dial	•
Soil levels	**3**
Spin speeds	**4**
Timed liquid detergent dispenser	•
Water supply	**Hot & Cold**
Water temperature controls	**5**
Wrinkle Free	•

Performance

Detergent	**High efficiency**
Maximum spin speed	**1400 rpm**
Number of spin speeds	**4**
Smart Diagnosis of problems	•
SmartDrive™ technology	•
Vortex wash	•

Product dimensions

Depth	**25 3/8 "**
Height	**33 1/4 - 33 5/8 "**
Width	**23 7/16 "**

Wash Cycles

Bulky	•
Cottons	•
Customise cycle	•
Delicate	•
Drum Clean	•
Everyday	•
Handwash	•
Heavy	•
Number of wash cycles	**12**
Quick 30	•
Rinse	•
Spin	•
Sports	•

SKU 96236

The product dimensions and specifications in this page apply to the specific product and model. Under our policy of continuous improvement, these dimensions and specifications may change at any time. You should therefore check with Fisher & Paykel's Customer Care Centre to ensure this page correctly describes the model currently available. © Fisher & Paykel Appliances Ltd 2020

Other product downloads available at fisherpaykel.com

- Energy Label
- Guide d'installation FR
- Installation Guide (English)
- Planning Guide (English)
- User Guide (Canadian French)
- User Guide (Canadian French)
- User Guide (English)

Where applicable:

All appliances use energy, and energy usage typically generates carbon emissions. **Fisher & Paykel Appliances' In-use Energy Carbon Emissions Estimate** indicates carbon emissions from a product's in-use energy. This is calculated either annually or per cycle, using the product's market-specific energy label energy consumption data multiplied by the carbon emissions factor for energy in your country or region.

Our In-use Energy Carbon Emissions Estimate is designed to assist customers in making informed purchasing decisions when comparing different Fisher & Paykel products. For example, a heat pump dryer typically has a lower In-use Energy Carbon Emissions Estimate than a vented dryer.

24/7

A PEACE OF MIND SALE

24 Hours 7 Days a Week Customer Support

T 1.888.936.7872 **W**www.fisherpaykel.com