120cm Series 7 Box Chimney Wall Rangehood

Series 7 | Contemporary

Stainless Steel and Glass



This Contemporary style rangehood extracts steam, grease and cooking odours quietly and efficiently.

- With three fan speeds plus boost, select the perfect extraction rate for your cooking
- Powerful maximum air movement of 780m³/hr
- Energy-efficient LED lighting to illuminate your cooking surface
- Pair with a compatible cooktop and the extraction rate will automatically adjust to suit your cooking
- Wi-Fi enabled for notifications through the SmartHQ™ app

DIMENSIONS

Height	635-1035 mm
Width	1198 mm
Depth	500 mm

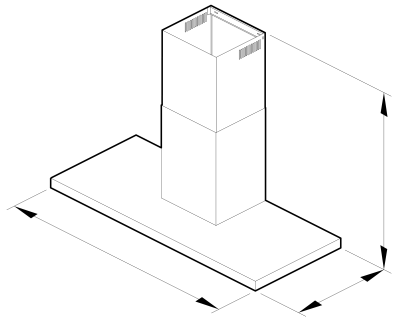

FEATURES & BENEFITS

Effective Extraction

Featuring perimeter extraction, four fan speeds, and a boost function, this range hood provides powerful extraction to quickly remove odors and steam. Odours can linger in the kitchen well after cooking is finished so the timer keeps the hood working for up to 15 minutes before automatically turning off.

Simple Controls

The intuitive control panel responds to the touch of your finger. LED strip lighting illuminates the entire cooktop surface for the perfect sear or ideal reduction. Rangehood settings, including temperature and fan speed, can be controlled via the SmartHQ™ app, with additional voice control options for fan speeds and lighting.

The Perfect Pair

Achieve kitchen perfection by pairing this rangehood with a compatible cooktop. The fan speed will automatically adjust to suit the cooktop power levels, eliminating the need for manual adjustments.

Easy Cleaning

Designed for simple removal, the filters are easy to clean and dishwasher safe, while the glass and stainless steel finish is easily wiped clean. The SmartHQ™ app will notify you when to clean the filter to ensure you get the best performance out of your rangehood.

Easy Installation

This rangehood is the perfect partner to your Fisher & Paykel cooktop. It can be either externally ducted or internally recirculated, making it perfect for apartments.

SPECIFICATIONS

Accessories (sold separately)

Chimney extension	791774
Eave ducting kit	PD-RHK150E
Recirculation carbon filter	792481
Recirculation diverter	792560
Roof ducting kit	PD-RHK150T
Side wall ducting kit	PD-RHK150W

Fan ratings

Maximum air movement	780 m³/hr

Installation and cleaning

Air outlet size	150 mm
Dishwasher safe filters	4
Ducted	Top extraction
Internal blower included	•
Recirculation	Optional - top extraction
Two piece height adjustable flue	•

Performance

Extraction type	Surface
Fan speeds	3
Filter type	Mesh
Number of filters	4

Power requirements

Supply frequency	50 Hz
Supply voltage	220-240 V
Total Power	248 W

Product dimensions

Depth	500 mm
Height	635-1035 mm
Width	1198 mm

Ventilation features

Auto-off/Run-on timer	•
Dimmable lights	•
Filter cleaning alert	•
Light type	LED
Smart appliance	•
Timer function	•

SKU 50197

The product dimensions and specifications in this page apply to the specific product and model. Under our policy of continuous improvement, these dimensions and specifications may change at any time. You should therefore check with Fisher & Paykel's Customer Care Centre to ensure this page correctly describes the model currently available. © Fisher & Paykel Appliances Ltd 2020

Other product downloads available at fisherpaykel.com

- DXF
- Data Sheet (English)
- DWG

Where applicable:

All appliances use energy, and energy usage typically generates carbon emissions. **Fisher & Paykel Appliances' In-use Energy Carbon Emissions Estimate** indicates carbon emissions from a product's in-use energy. This is calculated either annually or per cycle, using the product's market-specific energy label energy consumption data multiplied by the carbon emissions factor for energy in your country or region.

Our In-use Energy Carbon Emissions Estimate is designed to assist customers in making informed purchasing decisions when comparing different Fisher & Paykel products. For example, a heat pump dryer typically has a lower In-use Energy Carbon Emissions Estimate than a vented dryer.

24/7

A PEACE OF MIND SALE
24 Hours 7 Days a Week Customer Support
T 0800 372 273 Wwww.fisherpaykel.com