90cm Series 9 Contemporary 5 Burner Dual Fuel Pyrolytic Cooker

Series 9 | Contemporary

Stainless Steel



Get the best of both worlds with dual fuel performance. A spacious gas cooktop is paired with a large convection oven with rotisserie.

- Gas cooktop with five burners including wok burners
- Convection oven with 140L capacity and nine oven functions including Pastry Bake with pizza mode, and Rapid Proof
- Non-tip full-extension shelves for safe removal of hot dishes
- Pyrolytic self-clean that breaks down food residue for an easy clean
- Pyrolytic self-clean breaks down food residue at a very high temperature, leaving a light ash that's easily removed with a damp cloth

DIMENSIONS

Height	898 - 946 mm
Width	897 mm
Depth	600 mm

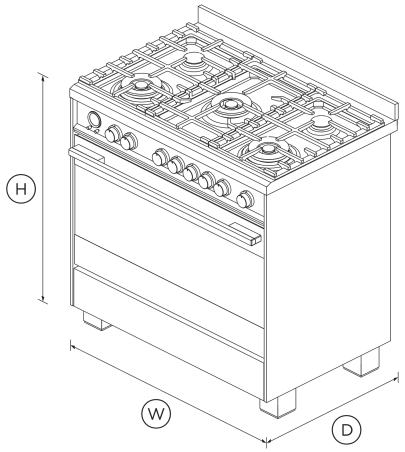

FEATURES & BENEFITS

Multi-Shelf Cooking

Our AeroTech™ system circulates air evenly throughout the entire oven so dishes on the top shelf turn out just as perfect as food cooking on the bottom shelf.

Quality And Durability

Every detail has been carefully crafted. The solid, perfectly balanced soft-close door, precise electric temperature control and chromed cast zinc dials all add up to an exceptional, premium freestanding cooker.

Power & Control

Instant and immediate control from the highest to the gentlest heat. The finely tuned hob controls let you sear, stir fry or simmer a delicate sauce to perfection.

Easy Cleaning

Cleaning up spills is effortless. Your cooktop simply needs a quick wipe to keep it looking good as new. The pyrolytic self-clean oven cycle breaks down food residue at a very high temperature, leaving a light ash that's easily removed with a damp cloth.

Even Heat

Accurate, electronically-controlled oven heat ensures a great result every time.

Large Capacity Oven

The generous 140L total capacity oven gives you plenty of space to cook multiple dishes at once.

SPECIFICATIONS

Accessories (included)

Flat wire shelf	1
Full extension sliding shelves	2 sets (part 578744)
Full extension telescopic shelves	2 sets (part 578744)
Grill rack	TRUE
Roasting dish	1
Rotisserie set	1 set
Small pot support	1 (part 533981 cast)
Step down wire shelf	•

Accessories (sold separately)

Kick strip, stainless steel (optional)	KICKOR90X1

Burner ratings

Dual wok burner inner/outer (LPG)	14.9MJ/h
Dual wok burner inner/outer (natural gas)	16.2MJ/h
Maximum burner power	16.2MJ/h
Semi-rapid burner (LPG) x2	5.8MJ/h
Semi-rapid burner (natural gas) x2	6.5MJ/h
Total cooktop power	58.0MJ/h
Triple ring wok burner (LPG) x2	14.4MJ/h
Triple ring wok burner (natural gas) x2	14.4MJ/h

Capacity

Shelf positions (main oven)	6
Total capacity	140 L
Usable capacity (main oven)	120 L

Cleaning

Acid resistant graphite enamel	•
Drop down grill element	•
Pyrolytic proof shelf runners	•
Pyrolytic self-clean	•
Removable oven door	•
Removable oven door inner glass	•
Removable shelf runners	•

Controls

Audio feedback	•
Automatic cooking/minute timer	•
Automatic pre-set temperatures	•
Celsius/Fahrenheit temperature	•
Electronic clock	•
High resolution display	•
Laser etched graphics	•
Precise electronic temperature control	•
Sabbath mode	•
Turned stainless steel clock buttons	•
Turned stainless steel clock crown (dial)	•
Turned stainless steel dials with illuminated halos	•

Installation Dimensions

Installation cutout dimensions (Depth)	600 mm
Installation cutout dimensions (Width)	900 mm

Oven features

AeroTech™ technology	•
Automatic rapid pre-heat	•
Electronic oven control	•
Full extension telescopic sliding shelves	•
Soft open/close door	•
True convection	•
Twin cavity fans	•
Warming drawer	•

Oven functions

Bake	•
Fan bake	•
Fan forced	•
Fan grill	•
Grill	•
Number of functions	9
Pastry Bake with Pizza mode	•
Rapid proof	•
Roast	•
Rotisserie	•

Oven performance

CoolTouch door	Quadruple glazed
Warming drawer power	202 W

Power requirements

Amperage	23 A
Supply frequency	50 Hz

Product dimensions

Depth	600 mm
Height	898 - 946 mm
Width	897 mm

Rangetop features

Brass burner spreader (power burner)	•
Embossed brass burner cap (power burner)	•
Hob rear trim	60 mm
LPG / Natural Gas compatible	•
Sealed range top	•

Safety

Advanced cooling system	•
Anti-tilt bracket	•
Balanced oven door	•

Catalytic venting system	•
CoolTouch door	•
Flame failure system	•
Full extension telescopic sliding shelves	•
Non-tip shelves	•
Spill containment	26 L

SKU	81687

The product dimensions and specifications in this page apply to the specific product and model. Under our policy of continuous improvement, these dimensions and specifications may change at any time. You should therefore check with Fisher & Paykel's Customer Care Centre to ensure this page correctly describes the model currently available. © Fisher & Paykel Appliances Ltd 2020

Other product downloads available at fisherpaykel.com

- User Guide (English)
- Installation Guide (English)
- Installation Guide - Kick Strip (English)
- Revit
- Rhino
- SketchUp
- User Guide (English)
- User Guide (English)

Where applicable:

All appliances use energy, and energy usage typically generates carbon emissions. **Fisher & Paykel Appliances' In-use Energy Carbon Emissions Estimate** indicates carbon emissions from a product's in-use energy. This is calculated either annually or per cycle, using the product's market-specific energy label energy consumption data multiplied by the carbon emissions factor for energy in your country or region.

Our In-use Energy Carbon Emissions Estimate is designed to assist customers in making informed purchasing decisions when comparing different Fisher & Paykel products. For example, a heat pump dryer typically has a lower In-use Energy Carbon Emissions Estimate than a vented dryer.

24/7

A PEACE OF MIND SALE
24 Hours 7 Days a Week Customer Support

T 0800 372 273 Wwww.fisherpaykel.com