90cm Series 9 Contemporary 5 Zone Induction Pyrolytic Cooker, 2 SmartZones

Series 9 | Contemporary

Stainless Steel



With a large oven and cooktops that can be paired to create an expansive cook zone, this is the perfect choice for those who love to cook.

- Five cooking zones, with the ability to pair zones to create SmartZones
- Convection oven with 140L total capacity and nine oven functions including Pastry Bake with pizza mode and rapid proof for making bread
- Non-tip full-extension shelves for safe removal of hot dishes
- Pyrolytic self-clean breaks down food residue at a very high temperature, leaving a light ash that's easily removed with a damp cloth

DIMENSIONS

Height	898 - 946 mm
Width	897 mm
Depth	600 mm

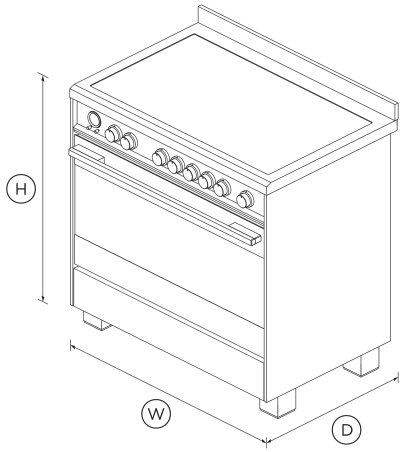

FEATURES & BENEFITS

Multi-Shelf Cooking

Our AeroTech™ system circulates heat evenly for a consistent temperature throughout the cavity, helping you achieve perfect results even when using multiple shelves.

Quality And Durability

Every detail has been carefully crafted. The solid, perfectly balanced soft-close door, durable cooktop and glowing halo dials all add up to an exceptional, premium freestanding cooker.

Power & Control

Instant and immediate control from the highest to the gentlest heat. The finely tuned cooktop controls let you sear or simmer a delicate sauce to perfection.

Easy Cleaning

Cleaning up spills is effortless. Your cooktop simply needs a quick wipe to keep it looking good as new. The pyrolytic self-clean oven cycle breaks down food residue at a very high temperature, leaving a light ash that's easily removed with a damp cloth.

Even Heat

Accurate, electronically-controlled oven heat ensures a great result every time.

Large Capacity Oven

The generous 140L total capacity oven gives you plenty of space to cook multiple dishes at once.

SPECIFICATIONS

Accessories (included)

Flat wire shelf	1
Full extension sliding shelves	2 sets (part 578744)
Full extension telescopic shelves	2 sets (part 578744)
Grill rack	TRUE
Roasting dish	1
Rotisserie set	1 set
Step down wire shelf	•

Accessories (sold separately)

Kick strip, stainless steel (optional)	KICKOR90X1

Capacity

Shelf positions	6
Shelf positions (main oven)	6
Total capacity	140 L
Usable capacity	121 L
Usable capacity (main oven)	121 L

Cleaning

Acid resistant graphite enamel	•
Drop down grill element	•
Flat easy clean glass surface	•
Pyrolytic proof shelf runners	•
Pyrolytic self-clean	•
Removable oven door	•
Removable oven door inner glass	•
Removable shelf runners	•

Controls

Audio feedback	•
Automatic cooking/minute timer	•
Automatic pre-set temperatures	•
Celsius/Fahrenheit temperature	•
Electronic clock	•
High resolution display	•
Laser etched graphics	•
Precise electronic temperature control	•
Sabbath mode	•
Toughened fused glass graphics	•
Turned stainless steel clock buttons	•
Turned stainless steel clock crown (dial)	•
Turned stainless steel dials with illuminated halos	•

Installation Dimensions

Installation cutout dimensions (Depth)	600 mm
Installation cutout dimensions (Width)	900 mm

Oven features

AeroTech™ technology	•
Automatic rapid pre-heat	•
Electronic oven control	•
Full extension telescopic sliding shelves	•
Soft open/close door	•
True convection	•
Twin cavity fans	•
Warming drawer	•

Oven functions

Bake	•
Fan bake	•
Fan forced	•
Fan grill	•
Grill	•
Number of functions	9
Pastry Bake with Pizza mode	•
Rapid proof	•
Roast	•
Rotisserie	•

Oven performance

CoolTouch door	Quadruple glazed
Warming drawer power	202 W

Power requirements

Amperage	68 A
Supply frequency	50 Hz

Product dimensions

Depth	600 mm
Height	898 - 946 mm
Width	897 mm

Rangetop features

Auto heat reduce	•
Dual colour display	•
Gentle heat	•
Heat settings	9
Hob rear trim	60 mm
Induction cooking technology	•
SmartZone	1
Zone bridging	•

Rangetop Performance

Centre	2300 W
Left front zone rating	1600 (1850) W
Left rear zone rating	2100 (3000) W
Number of cooking zones	5
PowerBoost	•
PowerBoost all zones	up to 3000 W
Right front zone rating	1600 (1850) W
Right rear zone rating	2100 (3000) W

Safety

Advanced cooling system	•
Anti-tilt bracket	•
Balanced oven door	•
Catalytic venting system	•
Child lock	•
CoolTouch door	•
Full extension telescopic sliding shelves	•
Non-tip shelves	•
Pan detection system	•
Safety time out	•
Spill containment	12 L
Spillage auto off	•
Surface hot indicators	•

SKU	81692

The product dimensions and specifications in this page apply to the specific product and model. Under our policy of continuous improvement, these dimensions and specifications may change at any time. You should therefore check with Fisher & Paykel's Customer Care Centre to ensure this page correctly describes the model currently available. © Fisher & Paykel Appliances Ltd 2020

Other product downloads available at fisherpaykel.com

- Installation Guide (English)
- Installation Guide - Kick Strip (English)
- Revit
- Rhino
- SketchUp
- User Guide (English)

Where applicable:

All appliances use energy, and energy usage typically generates carbon emissions. **Fisher & Paykel Appliances' In-use Energy Carbon Emissions Estimate** indicates carbon emissions from a product's in-use energy. This is calculated either annually or per cycle, using the product's market-specific energy label energy consumption data multiplied by the carbon emissions factor for energy in your country or region.

Our In-use Energy Carbon Emissions Estimate is designed to assist customers in making informed purchasing decisions when comparing different Fisher & Paykel products. For example, a heat pump dryer typically has a lower In-use Energy Carbon Emissions Estimate than a vented dryer.

24/7

A PEACE OF MIND SALE
24 Hours 7 Days a Week Customer Support

T 0800 372 273 Wwww.fisherpaykel.com