30" Series 7 Contemporary 4 Burner Gas Range, Natural Gas

Series 7 | Contemporary

Stainless Steel | Natural gas



Add contemporary style to your kitchen, and enjoy the instant response and precision of a gas-fueled oven and cooktop.

- Four burner gas cooktop, with two dual ring wok burners
- Gas oven with 3.5 cu ft total capacity
- Three oven functions: Bake, Convection Bake and Maxi Broil

DIMENSIONS

Height	35 3/4 - 37 5/8 "
Width	29 7/8 "
Depth	25 1/4 "

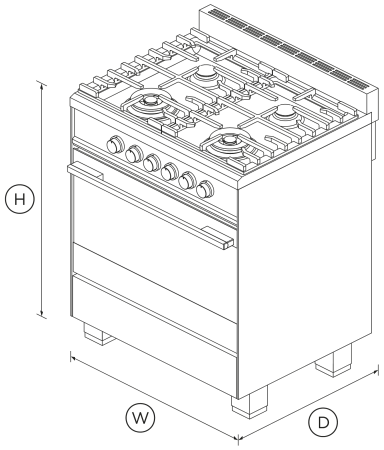

FEATURES & BENEFITS

Design Quality

Every detail has been carefully crafted. The solid, perfectly balanced soft-close door, durable cooktop grates and machined stainless dials all add up to an exceptional, premium range.

Large Capacity Oven

The large 3.5cu ft total capacity for this range gives you plenty of space to cook multiple dishes at the same time.

Performance Power

Precise cooktop controls let you sear or stir fry over instant, powerful heat. Use the high burner power or simmer a delicate sauce using the gentlest of heats.

Easy Cleaning

With its durable surface, your cooktop simply needs a quick wipe after cooking to keep it looking good as new for years to come.

SPECIFICATIONS

Accessories (included)

2-pc grill system (Broil pan and Grill rack)	•
Broil pan	•
Chromed shelf runners	1 set
Full extension telescopic shelves	2 sets (part 578776)
Grill rack	TRUE
Small pot support	1 (part 533981 cast)

Accessories (sold separately)

Kick strip, stainless steel (optional)	KICKOR30X1
Wok grate included	Yes

Burner ratings

Dual wok burner inner/outer (LPG)	1000 - 18000BTU
Dual wok burner inner/outer (natural gas)	1000 - 18000BTU
Maximum burner power	18000 BTU
Semi-rapid burner (LPG)	1500 - 7600BTU
Semi-rapid burner (natural gas)	1500 - 8000BTU
Total cooktop power	52000 BTU

Capacity

Shelf positions	7
Total capacity	3.5 cu ft
Usable capacity	2.7 cu ft

Cleaning

Acid resistant graphite enamel	•
Dishwasher proof trivets	•
Removable oven door	•
Removable shelf runners	•

Controls

Laser etched graphics	•

Gas Requirements

Supply Pressure (LPG)	11" W.C.P
Supply Pressure (natural gas)	4" W.C.P

Oven features

Auto re-ignition system	•
Concealed element	•
Convection	•
Electronic ignition	•
Full extension telescopic sliding shelves	•
Soft open/close door	•
Storage drawer	•

Oven functions

Bake	•
Convection bake	•
Maxi Broil	•
Number of functions	3

Oven performance

Bake power	14000 BTU
Broil	11000 BTU
CoolTouch door	Triple glazed

Power requirements

Connection	3-prong grounding type [NEMA 5-15P plug]
Service	15 A
Supply frequency	60 Hz
Supply voltage	120 V

Product dimensions

Depth	25 1/4 "
Height	35 3/4 - 37 5/8 "
Width	29 7/8 "

Rangetop features

Hob rail	•
LPG / Natural Gas compatible	•
Sealed range top	•

Safety

ADA compliant	•
Advanced cooling system	•
Anti-tilt bracket	•
Balanced oven door	•
CoolTouch door	•
Full extension telescopic sliding shelves	•
Non-tip shelves	•
Spill containment	1/2 gallon

SKU	82763

The product dimensions and specifications in this page apply to the specific product and model. Under our policy of continuous improvement, these dimensions and specifications may change at any time. You should therefore check with Fisher & Paykel's Customer Care Centre to ensure this page correctly describes the model currently available. © Fisher & Paykel Appliances Ltd 2020

Other product downloads available at fisherpaykel.com

- DXF
- Data Sheet (English)
- DWG
- Installation Guide (English)
- Installation Guide (Canadian French)
- California Warning Proposition 65 (English, Spanish, Canadian French, Chinese)
- Revit
- Rhino
- Right To Repair Declaration (English, Canadian French)
- SketchUp
- User Guide (English)
- User Guide (Canadian French)

Where applicable:

All appliances use energy, and energy usage typically generates carbon emissions. **Fisher & Paykel Appliances' In-use Energy Carbon Emissions Estimate** indicates carbon emissions from a product's in-use energy. This is calculated either annually or per cycle, using the product's market-specific energy label energy consumption data multiplied by the carbon emissions factor for energy in your country or region.

Our In-use Energy Carbon Emissions Estimate is designed to assist customers in making informed purchasing decisions when comparing different Fisher & Paykel products. For example, a heat pump dryer typically has a lower In-use Energy Carbon Emissions Estimate than a vented dryer.



A PEACE OF MIND SALE
24 Hours 7 Days a Week Customer Support

T 1.888.936.7872 Wwww.fisherpaykel.com