10kg Series 9 Contemporary Heat Pump Dryer, Woolmark Blue

Series 9 | Heat Pump

White



A sophisticated Heat Pump Dryer offering tailored drying and advanced care. With intelligent sensing and delicate care, the glass control panel with vibrant 7” touchscreen ensures every cycle is gentle, precise and optimised.

- Sophisticated care for 8 fibre types, including natural Linen and Silk
- 3D Active Sense detects moisture deep into the load, even in bulky items or large loads
- Intelligent Temperature System maintains controlled, low temperatures for perfectly precise drying
- Woolmark Blue certified for hand-wash only woollens
- Connect SmartHQ™ for notifications, guides and extra functions

DIMENSIONS

Height	850 mm
Width	602 mm
Depth	682 mm

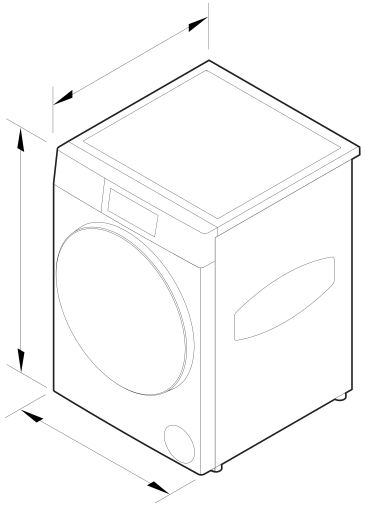

FEATURES & BENEFITS

SPECIALISED CARE FOR EVERY FABRIC

Fisher & Paykel Series 9 Dryers make caring for delicate garments effortless, with a full-colour 7” touchscreen guiding each cycle. Gentle Heat Pump technology dries at lower temperatures to protect fibres and reduce energy use. Each fibre’s molecular structure affects how moisture moves and evaporates, so Fibre-Led cycles for soft Silk, delicate Down and natural Linen are precisely tuned to the ideal temperature and duration, preserving softness, structure and lasting quality.

INTELLIGENT HEAT PUMP TECHNOLOGY

Our Intelligent Temperature System with Heat Pump Technology provides gentle care for delicate fibres like Linen, which is sensitive to high heat. Our Linen cycle, variable speed compressor and Ultra Delicate Item Type reduce strain, using multi-directional drum movements and low-temperature drying at precisely 45C to dry perfectly while preserving Linen’s natural texture, strength and breathable comfort.

PRECISION IN EVERY DETAIL

Our most perfect pair yet, reimagined for modern living. With a single 7" touchscreen, angled and streamlined for effortless cycle control, plus a newly positioned lint filter on the dryer, it offers a seamless fabric care experience, elevated beyond the utility space. Designed to complement one another in both form and function, our Front Loader Washers and Heat Pump Dryers feature refined materials, large doors and complementary cycles that work in harmony to care for a wide range of fibres.

ADVANCED MOISTURE SENSING

Retain the softness, loft, and warmth of Down jackets with 3D Active Sense. By sensing moisture both on the surface and inside the load, the cycle is adjusted for gentle, even drying. Jackets dry with up to 17% more volume than air drying, protecting fine protein fibres from heat and friction while preserving structure and lasting warmth.

GENTLE CARE FOR THE FINEST WOOL

Even the most delicate, hand-wash only woollens are safely dried with Woolmark Blue certified cycles. Wool fibres are fragile when wet, and heat can quickly alter their structure. Precisely controlled temperature and airflow gently care for each fibre, preserving softness, shape, and fit so garments emerge beautifully maintained and ready to wear.

STEAM REFRESH

Gently refresh Linen garments with Steam Refresh. Repeated wetting and drying can stiffen Linen fibres, but Steam Refresh applies just the right amount of moisture and movement to reduce creases and odours without a full wash, leaving garments fresh, soft and ready to wear in minutes.

PROTECT LINEN FROM TANGLING

TangleProtect keeps Linen garments moving freely by alternating the drum direction, preventing twisting or clumping that can cause uneven drying. Linen fibres absorb water easily, causing them to swell and collapse, which leads to creasing. The full-reversing drum gently tumbles garments, reducing strain, reducing wrinkles, and preserving Linen's natural softness, texture and drape.

SPECIFICATIONS

Accessories (included)

Drying rack	•

Capacity

Total capacity	10 kg

Connected Features

Alerts and notifications	•
Education and onboarding	•
Initial software update for full feature set	•
Monitoring	•
Remote operation	•
Software updates	•

Consumption

Energy rating	10 star
Energy usage	122kWh/year
In-use energy carbon emissions estimate	11.0kgCO2e/year

Controls

Adjustable alert beeps	•
Beeps on/off function	•
Interface type	7" touchscreen
Screen brightness settings	•

Features

Clean condenser filter reminder	•
Clean door lint filter reminder	•
Crease Free	•
Drain Hose	•
Drum light	•
Easy access lint filter	•
Easy clean condenser filter	•
End of cycle signal	•
Favourite cycle	Multiple
Front and back levelling feet	•
Iron ready alert	•
Keylock	•
No external venting	•
Push to open water tank	•
Removable water tank	•
Reversible door	•
Smart appliance	•
Stainless steel drum	•
Water tank full indicator	•

Performance

3D sensing technology	•
Auto sensing	•
Compressor type	Variable speed
Delay start	•
Dryness settings	4
Heat pump technology	•
Refrigerant type	R290
Reverse tumbling	Full reverse tumbling
TangleProtect	•
Time dry	•

Product dimensions

Depth	682 mm
Height	850 mm
Width	602 mm

SKU	93310

The product dimensions and specifications in this page apply to the specific product and model. Under our policy of continuous improvement, these dimensions and specifications may change at any time. You should therefore check with Fisher & Paykel's Customer Care Centre to ensure this page correctly describes the model currently available. © Fisher & Paykel Appliances Ltd 2020

Other product downloads available at fisherpaykel.com

- DWG
- DXF
- Energy Label
- Installation Guide - Dryer (English)
- Installation Guide - Side by Side (English)
- Installation Guide - Stacked (English)
- Performance Guide (English)

- Planning Guide - Fabric Care Solutions (English)
- Revit
- Rhino
- Introducing Fabric Care Solutions (English)
- Sketchup
- User Guide (English)

Where applicable:

All appliances use energy, and energy usage typically generates carbon emissions. **Fisher & Paykel Appliances' In-use Energy Carbon Emissions Estimate** indicates carbon emissions from a product's in-use energy. This is calculated either annually or per cycle, using the product's market-specific energy label energy consumption data multiplied by the carbon emissions factor for energy in your country or region.

Our In-use Energy Carbon Emissions Estimate is designed to assist customers in making informed purchasing decisions when comparing different Fisher & Paykel products. For example, a heat pump dryer typically has a lower In-use Energy Carbon Emissions Estimate than a vented dryer.



A PEACE OF MIND SALE
24 Hours 7 Days a Week Customer Support

T 0800 372 273 **W**www.fisherpaykel.com