60cm Series 9 Integrated Insert Wall Rangehood

Series 9 | Integrated

Stainless Steel

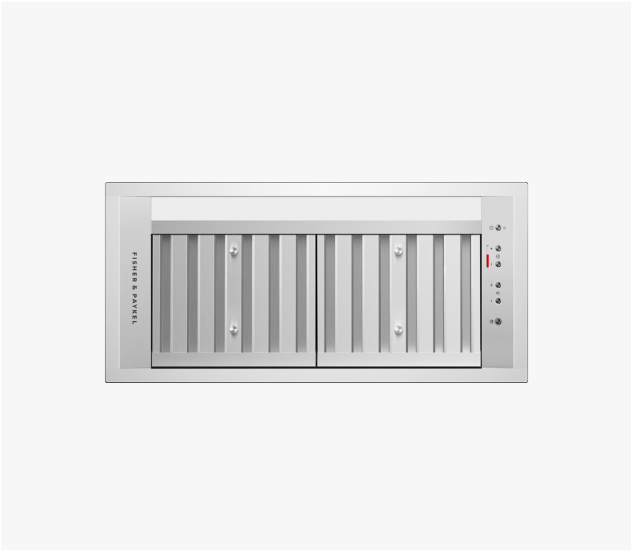

With edge-to-edge extraction, this efficient, stylish rangehood is perfectly hidden away in your cabinetry.

- With five fan speeds, select the perfect extraction rate for your cooking
- With dimmable LED strip lighting
- 700m³/hr maximum airflow
- Dishwasher safe filters that are easy to remove and clean

DIMENSIONS

Height	407 mm
Width	580 mm
Depth	280 mm

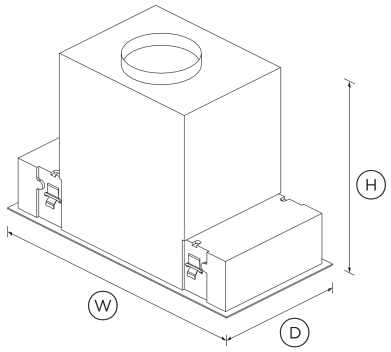

FEATURES & BENEFITS

Edge To Edge Extraction

Filters effectively reach edge to edge, which maximises the extraction area.

Full Surface Lighting

The even lighting provides full coverage of the cooktop, illuminating food in its true colour, with no hot or dark spots and no glare or shadows. The dimmable lights have fade in and fade out features.

Easy To Use

This easy to use rangehood operates with fingertip control of LED-illuminated soft touch buttons. Selected models also come with a remote control.

Energy Efficiency

Powered by a brushless DC motor, the Integrated Rangehood operates more efficiently, more reliably and with less noise than units with AC motors.

Effortless Cleaning

The stainless steel filters are easy to remove and are dishwasher safe. A self-contained grease tray within the filters makes them very easy to clean.

Simple Installation

The simple installation process is compatible with most precut cabinetry. The adjustable mounting system can be installed with a 16mm to 38mm cabinetry board.

SPECIFICATIONS

Fan ratings

Maximum air movement	700 m³/hr
Speed 3 sound rating	54 dBA

Installation and cleaning

Air outlet size	150 mm
Dishwasher safe filters	2
Ducted	Top extraction

Performance

Extraction type	Surface
Fan speeds	5
Filter type	Stainless Steel Baffle

Power requirements

Supply voltage	230 V

Product dimensions

Depth	280 mm
Height	407 mm
Width	580 mm

Ventilation features

Auto-off/Run-on timer	•
Dimmable lights	•
Filter cleaning alert	•
Light type	LED strip
Number of light settings	5
Simple sensing	•

SKU 50250

The product dimensions and specifications in this page apply to the specific product and model. Under our policy of continuous improvement, these dimensions and specifications may change at any time. You should therefore check with Fisher & Paykel's Customer Care Centre to ensure this page correctly describes the model currently available. © Fisher & Paykel Appliances Ltd 2020

Other product downloads available at fisherpaykel.com

- DWG
- DXF
- Archicad
- Data Sheet (English)
- Installation Guide (English)
- Revit
- Rhino
- SketchUp
- User Guide (English)

Where applicable:

All appliances use energy, and energy usage typically generates carbon emissions. **Fisher & Paykel Appliances' In-use Energy Carbon Emissions Estimate** indicates carbon emissions from a product's in-use energy. This is calculated either annually or per cycle, using the product's market-specific energy label energy consumption data multiplied by the carbon emissions factor for energy in your country or region.

Our In-use Energy Carbon Emissions Estimate is designed to assist customers in making informed purchasing decisions when comparing different Fisher & Paykel products. For example, a heat pump dryer typically has a lower In-use Energy Carbon Emissions Estimate than a vented dryer.



A PEACE OF MIND SALE
24 Hours 7 Days a Week Customer Support

T 0800 372 273 Wwww.fisherpaykel.com