# Gas Range 48", 6 Burners with Griddle

Professional



With Professional styling, this large range has six burners delivering powerful high heat, a griddle and two gas ovens.

- Top burner heat of 23,500 BTU, for seriously fast boiling
- Expansive 7.7 cu ft total oven capacity across two oven cavities
- Non-tip full-extension shelves in main cavity for safe removal of hot dishes

## DIMENSIONS

| | |
|---|---|
| **Height** | **35 3/4 - 36 3/4 "** |
| **Width** | **47 7/8 "** |
| **Depth** | **29 1/8 "** |

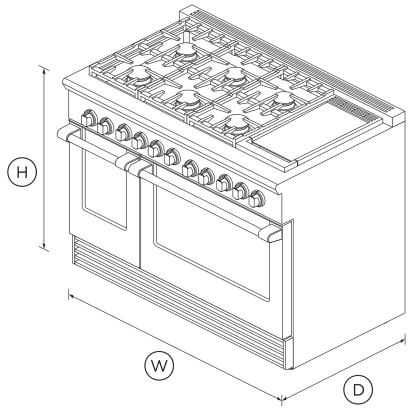


## SPECIFICATIONS

### Accessories (sold separately)

| | |
|---|---|
| Square handle option | **AH-R48** |

### Burner ratings

| | |
|---|---|
| Maximum burner power | **23500 BTU** |
| Power back centre | **18500BTU** |
| Power back left | **18500BTU** |
| Power back right | **18500BTU** |
| Power front centre | **18500BTU** |
| Power front left | **23500BTU** |
| Power front right | **18500BTU** |
| Power griddle | **16500BTU** |
| Total cooktop power | **132500 BTU** |

### Capacity

| | |
|---|---|
| Shelf positions (main oven) | **5** |
| Shelf positions (second oven) | **5** |

### Controls

| | |
|---|---|
| Electric circuit | **3** |
| Metal illuminated dials | • |

### Gas Requirements

| | |
|---|---|
| Fitting and pipe | **½ NPT, min. ⅝" ⍓ flex line** |
| Supply Pressure (natural gas) | **6" to 9" W.C** |

### Main oven features

| | |
|---|---|
| Broil pan | • |
| Electronic oven control | • |
| Full extension telescopic racks | • |
| Infrared broiler | • |
| Internal light | • |

### Main oven functions

| | |
|---|---|
| Bake | • |
| Broil | • |
| Convection bake | • |

| | |
|---|---|
| Number of oven functions | **3** |

**Oven features**

| | |
|---|---|
| Auto re-ignition system | • |

**Power requirements**

| | |
|---|---|
| Amperage | **15 A** |
| Rated current | **15 A** |
| Supply frequency | **60 Hz** |

**Product dimensions**

| | |
|---|---|
| Depth | **29 1/8 "** |
| Depth (excluding handles) | **29 1/8 "** |
| Height | **35 3/4 - 36 3/4 "** |
| Width | **47 7/8 "** |

**Rangetop features**

| | |
|---|---|
| Sealed range top | • |
| Vent trim included | • |

**Recommended Back Guards Ventilation**

| | |
|---|---|
| Combustible situation | **BGRV2-3048H** |
| Minimum CFM | **1200** |
| Non combustible situation | **BGRV2-3048 / BGRV2-1248** |

| | |
|---|---|
| Recommended hood | **HCB48-12_N (48"" Professional Range Hood, Dual Blower)** |

**Safety**

| | |
|---|---|
| ADA compliant | • |
| Full extension telescopic sliding shelves | • |

**Secondary oven features**

| | |
|---|---|
| 3/4 Extension racks | **2** |
| Electronic oven control | • |
| Internal light | • |

**Secondary oven functions**

| | |
|---|---|
| Bake | • |
| Number of secondary oven functions | **2** |
| Proof | • |

| | |
|---|---|
| SKU | 71346 |

The product dimensions and specifications in this page apply to the specific product and model. Under our policy of continuous improvement, these dimensions and specifications may change at any time. You should therefore check with Fisher & Paykel's Customer Care Centre to ensure this page correctly describes the model currently available. © Fisher & Paykel Appliances Ltd 2020

**Other product downloads available at fisherpaykel.com**

- DWG
- DXF
- Data Sheet (English)
- Installation Guide (English, Canadian French)
- Planning Guide (English)
- User Guide (English)
- User Guide (Canadian French)

**Where applicable:**

All appliances use energy, and energy usage typically generates carbon emissions. **Fisher & Paykel Appliances' In-use Energy Carbon Emissions Estimate** indicates carbon emissions from a product's in-use energy. This is calculated either annually or per cycle, using the product's market-specific energy label energy consumption data multiplied by the carbon emissions factor for energy in your country or region.

Our In-use Energy Carbon Emissions Estimate is designed to assist customers in making informed purchasing decisions when comparing different Fisher & Paykel products. For example, a heat pump dryer typically has a lower In-use Energy Carbon Emissions Estimate than a vented dryer.

24/7

A PEACE OF MIND SALE

**24 Hours 7 Days a Week Customer Support**

**T** 1.888.936.7872 **W**www.fisherpaykel.com