# Freestanding French Door Refrigerator Freezer, 36", 20.1 cu ft, Ice

Professional



Styled like a refrigerator found in a professional kitchen, with serious storage capacity and stylish stainless steel finish.

- ActiveSmart™ technology helps keep food fresher for longer by constantly maintaining the ideal temperature
- Internal ice maker with boost for busy times
- Spacious bottom freezer with full extension drawer gives easy access to frozen goods

## DIMENSIONS

| | |
|---|---|
| **Height** | **70 15/32 "** |
| **Width** | **35 7/16 "** |
| **Depth** | **27 3/8 "** |

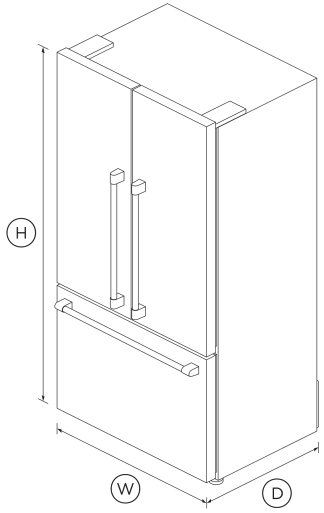


## SPECIFICATIONS

### Accessories (sold separately)

| | |
|---|---|
| Water filter replacement | **847200 - FWC3** |

### Capacity

| | |
|---|---|
| Total gross capacity | **20.1 cu ft** |
| Volume freezer | **5.5 cu ft** |
| Volume refrigerator | **14.6 cu ft** |

### Consumption

| | |
|---|---|
| Energy rating | **Energy Star** |
| Energy usage | **532kWh/year** |
| In-use energy carbon emissions estimate | **61.3kgCO2e/year** |

### Features

| | |
|---|---|
| Adjustable door shelves | **14** |
| Adjustable glass shelves | **2** |
| Covered door shelves | **2** |
| Deli storage bins | **2** |
| Door alarm | • |
| Fruit and vegetable bins | **2** |
| LED lighting | • |
| Smart appliance | • |
| SmartTouch control panel | • |
| Soft close doors | • |
| Stackable bottle holders | **4** |
| Water Filter | **836848** |

### Freezer Features

| | |
|---|---|
| Automatic ice maker | • |
| Bottle chill | • |
| Door alarm | • |
| Fast freeze | • |
| Ice bin and scoop | • |
| Ice Boost | • |
| LED Lighting | • |

### Performance

| | |
|---|---|
| ActiveSmart™ Foodcare | • |
| Adaptive defrost | • |
| Frost free freezer | • |
| Humidity control system | • |
| Inverter controlled compressor | • |
| Sabbath mode | • |

### Power requirements

| | |
|---|---|
| Rated current | **10 A** |
| Supply frequency | **60 Hz** |
| Supply voltage | **115 V** |

### Product dimensions

| | |
|---|---|
| Depth | **27 3/8 "** |
| Height | **70 15/32 "** |
| Width | **35 7/16 "** |

| | |
|---|---|
| SKU | 24447 |

The product dimensions and specifications in this page apply to the specific product and model. Under our policy of continuous improvement, these dimensions and specifications may change at any time. You should therefore check with Fisher & Paykel's Customer Care Centre to ensure this page correctly describes the model currently available. © Fisher & Paykel Appliances Ltd 2020

**Other product downloads available at fisherpaykel.com**

- DWG
- DXF
- Data Sheet (English)
- Energy Label (English, Canadian French)
- Installation Guide (English)

**Where applicable:**

All appliances use energy, and energy usage typically generates carbon emissions. **Fisher & Paykel Appliances' In-use Energy Carbon Emissions Estimate** indicates carbon emissions from a product's in-use energy. This is calculated either annually or per cycle, using the product's market-specific energy label energy consumption data multiplied by the carbon emissions factor for energy in your country or region.

Our In-use Energy Carbon Emissions Estimate is designed to assist customers in making informed purchasing decisions when comparing different Fisher & Paykel products. For example, a heat pump dryer typically has a lower In-use Energy Carbon Emissions Estimate than a vented dryer.

24/7

## A PEACE OF MIND SALE

**24 Hours 7 Days a Week Customer Support**

**T** 1.888.936.7872 **W**www.fisherpaykel.com