18kg + 10kg Series 9 Front Loader Washer Dryer Combi, Heat Pump

Series 9 | Combination

Graphite



An all-in-one fabric care solution, designed to intuitively deliver perfect results with every load. The combination of Heat Pump technology and a generous capacity ensures large loads can be washed and dried effectively and efficiently - without having to unload in-between.

- Wash and Dry with 13 continuous cycles, up to 18kg wash and 10kg dry capacity
- Heat pump technology dries gently and efficiently, even at low temperatures
- Auto-dosing adjusts to each load for precise detergent and softener use
- SmartHQ™ alerts and remote control keep you connected, wherever you are

DIMENSIONS

Height	1186 mm
Width	711 mm
Depth	813 mm

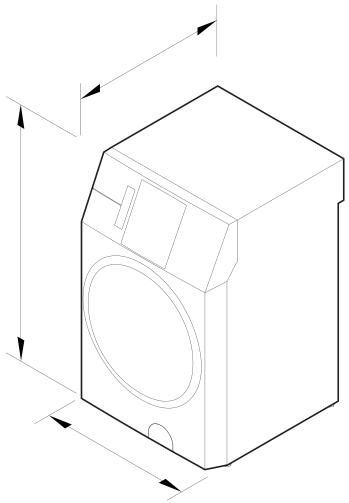

FEATURES & BENEFITS

ALL-IN-ONE FABRIC CARE

A sophisticated take on fabric care, brought together with thoughtfully engineered design. Complete an everyday wash-to-dry cycle in as little as 2 hours* and ensure garments are clean, dry and cared for - without having to unload in-between. Decades of expertise deliver intuitive convenience and seamless performance. With a stainless steel fascia, glass door, and generous 18kg wash and 10kg dry capacity - to support life lived away from the laundry.
*Based on an everyday 3kg Mixed Cotton load using the Wash & Dry Quick Cycle.

INTUITIVE CONTROL FOR EXCEPTIONAL CARE

Enjoy fabric care at your fingertips like never before with the intuitive 10” touchscreen. With high-definition clarity and guided navigation, you can add up to three favourite cycles per function to the home screen, tailor each cycle with ease and care for delicate fibre types.

HEAT PUMP TECHNOLOGY

Dry with efficiency and precision, even at low temperatures. Our advanced heat pump system is enhanced with a larger fan that optimises airflow and enables short cycle times* while ensuring fabrics are gently cared for, all with exceptional energy efficiency.
*Wash and Dry a 3kg Mixed Cotton load in under 2 hours, or a 4.5kg Mixed Cotton Load in under 3 hours.

PRECISE DISPENSING

For optimal fabric care, Auto Dose tailors each cycle using load-sensing technology, dispensing just the right amount of detergent and softener, from generous reservoirs that hold enough for up to 29 washes. For added flexibility, there's also the option to manually dose detergent, softener or pre-wash treatments as needed.

STEAM REFRESH

Revive garments in minutes with three tailored steam refresh cycles; Shirts, Delicates, and Mixed. Reduce wrinkles and neutralise odours without a full wash, for the convenience of fresh garments - without compromising on fabric care.

ELEVATED ERGONOMICS

Form meets function in every detail. From the angled drum for easier un-loading to the tilted touchscreen for better visibility, every element is tailored to the way you care for your fabric. It's refined ergonomics, grounded in human-centred design.

CARE THAT LASTS LONGER

For complete fabric care on your terms, Crease Free+ prevents wrinkles and maintains freshness by circulating air for up to 12 hours after a cycle. After a wash, keep the drum fresh with Drum Dry - simply close the door and moisture and odours will be reduced, ready for the next load.

SPECIFICATIONS

Capacity

Capacity	Wash (18kg), + Dry (10kg)

Consumption

Energy rating	5 star (Wash) + 9 star (Dry)
Water rating	4.5 star (WELS)

Continuous Wash & Dry Cycles

Bulky	•
Cotton	•
Delicate	•
Down	•
Easy Iron	•
Heavy	•
Mixed	•
Outdoor	•
Quick	•
Rinse	•
Sheets	•
Silk	•
Towels	•
Wool	•

Dry Cycles

Bulky	•
Cotton	•
Delicate	•
Down	•
Easy Iron	•
Heavy	•
Mixed	•
Outdoor	•
Rack Dry	•
Sheets	•
Silk	•
Towels	•
Wool	•

Features

Add item	•
Adjustable feet height	•
Anti-Bacteria Treatment (ABT)	Gasket, dispenser, draining system
Auto out of balance correction	•
Delay start	•
Door/Gasket spray	•
Drum light	•
Drying rack	•
Favourite mode	•
Flood protection	•
Keylock	•
No Spin / Spin hold	•
Pre Wash	•
Pre-wash dispenser	Manual
Remote mode	•
Reverse tumbling	Full reverse tumbling
Smart appliance	•
Stainless steel drum	•
Time to go	•
Touch TFT screen	•
Water supply	Cold
Woolmark certified	•

Functions

Dry	•
Stream Refresh	•
Wash	•
Wash & Dry	•

Performance

Load sensing	•
Maximum spin speed	1200 rpm
Motor type	Direct Drive
Number of spin speeds	6
SmartDrive™ technology	•
Spin speeds	No Spin, 400, 600, 800, 1000, 1200
Steam Care	•
Wash temperature selection	6
Wash temperatures	Cold

Product dimensions

Depth	813 mm

Height	1186 mm
Width	711 mm

Wash Cycles

Bulky	•
Cotton	•
Delicate	•
Denim	•
Down	•
Drum Clean	•
Easy Iron	•
Heavy	•
Mixed	•
Outdoor	•
Quick 15	•
Quick 30	•
Rinse	•
Sanitise	•
Sheets	•
Silk	•
Spin	•
Towels	•
Wool	•

Wash Program Modifiers

Allergy Care	•
Crease Free+	•
Eco	•
Quiet	•
Soak	•
UV Sanitise	•
Wash +	•
Water +	•

SKU 92302

The product dimensions and specifications in this page apply to the specific product and model. Under our policy of continuous improvement, these dimensions and specifications may change at any time. You should therefore check with Fisher & Paykel's Customer Care Centre to ensure this page correctly describes the model currently available. © Fisher & Paykel Appliances Ltd 2020

Other product downloads available at fisherpaykel.com

- DXF
- DWG
- Energy Label
- Installation Guide (English)
- Planning Guide (English)
- Revit
- Rhino
- SketchUp
- User Guide (English)

Where applicable:

All appliances use energy, and energy usage typically generates carbon emissions. **Fisher & Paykel Appliances' In-use Energy Carbon Emissions Estimate** indicates carbon emissions from a product's in-use energy. This is calculated either annually or per cycle, using the product's market-specific energy label energy consumption data multiplied by the carbon emissions factor for energy in your country or region.

Our In-use Energy Carbon Emissions Estimate is designed to assist customers in making informed purchasing decisions when comparing different Fisher & Paykel products. For example, a heat pump dryer typically has a lower In-use Energy Carbon Emissions Estimate than a vented dryer.

24/7

A PEACE OF MIND SALE
24 Hours 7 Days a Week Customer Support
T 0800 372 273 Wwww.fisherpaykel.com