Series 7 Integrated Dishwasher

Series 7 | Integrated

Panel Ready



Designed to fit seamlessly into kitchens requiring ADA heights, with flexible loading and quiet performance. Auto door open releases steam at the end of the cycle, while AirCurtain technology helps protect surrounding cabinetry.

- Intuitive, quiet cycles that adapt to your routine for reliable performance every time
- Recognized as Energy Star Most Efficient for efficient performance
- Pitch-adjustable racks fit 12 9□16" plates and make loading larger items easier
- SmartHQ™ app connectivity for remote control and cycle updates

DIMENSIONS

Height	32 1/4 - 34 5/8 "
Width	23 1/2 "
Depth	22 5/8 "

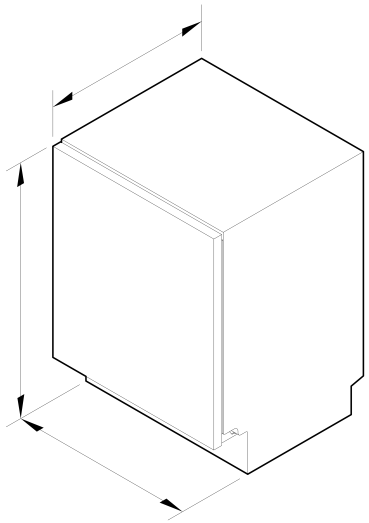

FEATURES & BENEFITS

Seamless integration

Designed for seamless integration, this dishwasher fits flush with surrounding cabinetry, including installations requiring ADA-compliant heights. Customize with a front panel and handle to match the kitchen space, supporting flexible design choices. With quiet performance and simple installation, it’s designed to enhance both the kitchen aesthetic and the everyday experience.

Intelligent care for every load

Seven wash programs, including Auto, adapt to the needs of each load for consistently effortless results. The Sanitize modifier provides extra protection by eliminating 99.9% of bacteria*, giving greater confidence when caring for everyday items.
*Certified to NSF/ANSI Standard 184

Effortless drying with AirCurtain

At the end of the cycle, the door automatically opens to release excess steam, while innovative AirCurtain technology creates a protective barrier, helping to safeguard surrounding cabinetry over time.

Flexibility for everyday use

Accommodates 16 place settings with flexible solutions including a third rack, adjustable middle rack, and a combination of pitch-adjustable and foldable tines. An external indicator light signals cycle completion, so you know exactly when it’s ready to unload.

Designed to minimize impact

Recognized as Energy Star Most Efficient, this dishwasher is designed to help reduce water and energy use by minimizing resource consumption. It supports a lower household footprint while delivering consistent, high performance.

Connected for everyday ease

Introducing the SmartHQ™ App - Now you’re in control, wherever and whenever. Get the most out of your Wi-Fi enabled appliance with Smart HQ making it easy to connect, control and monitor your smart dishwasher anywhere. You can conveniently access the latest tips, remote status notifications and more.

Easy installation

Designed with ease of installation in mind, this dishwasher features simple panel alignment for flush fit. Accessory panels and handles support a cohesive kitchen finish.

SPECIFICATIONS

Accessories (included)

Cutlery basket	•

Accessories (sold separately)

Door panel stainless steel	ADDW24PX
Handle kit Classic	AHCL-DDDW-24X
Handle kit Contemporary brushed black	AHD7DDDW60B

Handle kit Contemporary brushed silver	AHD7DDDW60S
Handle kit Contemporary round, aluminium	AHS-OBDD-60S
Handle kit Contemporary square fine, aluminium	AHD5-OBDD-60SX
Handle kit Contemporary square fine, black	AHD5-OBDD-60SB
Handle kit Contemporary square, aluminium	AHD3-OBDD-60S
Handle kit Contemporary square, black	AHD3-OBDD-60B
Handle kit Minimal black	AHM1DDDW60B
Handle kit Minimal grey	AHM1DDDW60G
Handle kit Professional round flush	AHP3-DWDD-SX
Handle kit Professional round flush, Brass off-stands	AHP3DDDW24BA
Handle kit Professional round flush, Dark Copper off-stands	AHP3DDDW24DC

Capacity and loading

Accommodates round plates up to (lower basket)	12 9/16"
Adjustable height, foldable cupracks	•
Easy lift adjustable upper basket	•
Fold down tines	•
Full width cutlery/utensil tray	•
Pitch adjustable tines	•
Place settings	16
Wine glass supports	•

Connected Features

Alerts and notifications	•
Education and onboarding	•
Monitoring	•
Remote operation	•
Software updates	•

Consumption

Energy rating	Energy star Most efficient
Energy usage	224kWh/year
In-use energy carbon emissions estimate	25.8kgCO2e/year
Water usage (per wash cycle)	3.2 gal

Controls

Energy saving delay start option of up to 24 hours	•
Floor light cycle feedback	•
Internal wash selector	•
Keylock	•
Rinse aid indicator light	•
Smart appliance	•

Features

Air curtain for countertop protection	•
Auto Door Open Dry	•
Flood protection	•
Half load option	•
Internal tub material	Stainless Steel
Motor type	Asynchronous
ThermoDry system	•
Three-stage filtration system	•

Performance

Noise emissions	46 dBA

Power requirements

Dedicated Circuit (A)	10A
Supply frequency	60 Hz
Voltage	110 - 120V

Product dimensions

Depth	22 5/8 "
Height	32 1/4 - 34 5/8 "
Width	23 1/2 "

Safety and compliance

ADA compliant	•

Wash Program Modifiers

Dry +	•
Half load	•
Sanitise	•
Wash modifiers	3

Wash Programs

60 min	•
Auto	•
Eco	•
Heavy	•
Light	•
Medium	•
Rinse	•
Wash programs	7

Water connection

Water pressure	30kPa - 1000 kPa

SKU	85730

The product dimensions and specifications in this page apply to the specific product and model. Under our policy of continuous improvement, these dimensions and specifications may change at any time. You should therefore check with Fisher & Paykel's Customer Care Centre to ensure this page correctly describes the model currently available. © Fisher & Paykel Appliances Ltd 2020

Other product downloads available at fisherpaykel.com

- DWG
- DXF
- Energy Label (English, Canadian French)
- Installation Guide (English, Canadian French, Spanish)
- Planning Guide (English)
- Planning Guide (Spanish)
- Planning Guide (Canadian French)
- Revit
- Rhino
- Right To Repair Declaration (English, Canadian French)
- SketchUp
- User Guide (English, Canadian French, Spanish)

Where applicable:

All appliances use energy, and energy usage typically generates carbon emissions. **Fisher & Paykel Appliances' In-use Energy Carbon Emissions Estimate** indicates carbon emissions from a product's in-use energy. This is calculated either annually or per cycle, using the product's market-specific energy label energy consumption data multiplied by the carbon emissions factor for energy in your country or region.

Our In-use Energy Carbon Emissions Estimate is designed to assist customers in making informed purchasing decisions when comparing different Fisher & Paykel products. For example, a heat pump dryer typically has a lower In-use Energy Carbon Emissions Estimate than a vented dryer.

24/7

A PEACE OF MIND SALE
24 Hours 7 Days a Week Customer Support
T 1.888.936.7872 Wwww.fisherpaykel.com