90cm Series 5 5 Zone Induction Cooktop, Low Current

Series 5 | Contemporary

Black Glass



With a spacious five-zone cooking area and Link Mode to connect compatible rangehoods, this low current 90cm induction cooktop offers flexibility and convenience. With 4.5kW power, it can be installed using existing wiring.*

- 20A rated current and 4.5kW rated power can be used with existing wiring*
- Use Link Mode to automatically activate your compatible rangehood as you cook
- Easily get started with guided setup and tips in the SmartHQ™ app
- Elevated design offers a sleek, modern look that enhances your kitchen's aesthetic

DIMENSIONS

Height	61 mm
Width	900 mm
Depth	530 mm

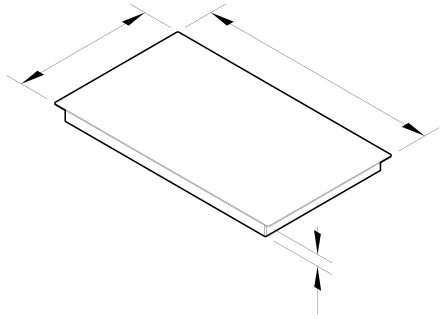

FEATURES & BENEFITS

Link Mode compatability

Use Link Mode to automatically activate your compatible rangehood as you cook, creating an intuitive, hands-free experience in the kitchen.

Low current induction

This generously sized induction cooktop is an ideal low current option for replacing gas or ceramic models. With a 20A rated current and 4.5kW rated power, it supports cost-effective installation using existing wiring.* *Installation requirements may vary; consult a qualified electrician.

Guided setup with SmartHQ™

SmartHQ™ provides step-by-step onboarding, helpful tips and setup guidance — right from your phone. Designed to support you beyond installation, the app helps you get familiar with your cooktop and explore its features at your own pace.

Five zones for flexible cooking

With five cooking zones, including a central zone for larger cookware, this cooktop offers generous space and flexibility — ideal for preparing multiple dishes at once.

Elevated design

A sleek black glass surface, refined detailing, and an updated user interface combine to deliver a cooktop that looks as good as it performs. Designed for seamless integration, it brings a modern, intuitive touch to everyday cooking.

Safer choice

Induction cooktops heat only when cookware is detected on the ceramic surface. Features like keylock, safety timeout, hot surface indicators, and auto switch-off in case of spills help ensure a safer cooking environment for everyone.

Easy cleaning

Induction heats the cookware, not the surrounding surface, so spills are less likely to bake on. The durable ceramic glass cleans easily with a simple wipe after cooking.

SPECIFICATIONS

Cleaning

Easy clean cooktop design	•

Connected Features

Education and onboarding	•

Consumption

In-use energy carbon emissions estimate	0.0kgCO2e/year

Controls

Minute timer	•
Smart appliance	•
Touch and slide controls	•

Performance

Gentle Heat	•
Induction cooking technology	•
Pause function	•
PowerBoost	•

Power requirements

Service	20A
Supply frequency	50 Hz
Supply voltage	220-240 V

Product dimensions

Depth	530 mm
Height	61 mm
Width	900 mm

Safety

Keylock	•
Pan detection system	•
Spillage auto off	•
Surface hot indicators	•

Zone ratings

Centre zone (PowerBoost set)	3000 (3500)
Left front zone (PowerBoost set)	2000 (2600)
Left rear zone (PowerBoost set)	1500 (1800)
Right front zone (PowerBoost set)	1500 (1800)
Right rear zone (PowerBoost set)	2000 (2600)

Zones

Number of zones	5

SKU	84203

The product dimensions and specifications in this page apply to the specific product and model. Under our policy of continuous improvement, these dimensions and specifications may change at any time. You should therefore check with Fisher & Paykel's Customer Care Centre to ensure this page correctly describes the model currently available. © Fisher & Paykel Appliances Ltd 2020

Other product downloads available at fisherpaykel.com

- DXF
- DWG
- Installation Guide (English)
- Planning Guide (English)
- Revit
- Rhino
- SketchUp
- User Guide (English)

Where applicable:

All appliances use energy, and energy usage typically generates carbon emissions. **Fisher & Paykel Appliances' In-use Energy Carbon Emissions Estimate** indicates carbon emissions from a product's in-use energy. This is calculated either annually or per cycle, using the product's market-specific energy label energy consumption data multiplied by the carbon emissions factor for energy in your country or region.

Our In-use Energy Carbon Emissions Estimate is designed to assist customers in making informed purchasing decisions when comparing different Fisher & Paykel products. For example, a heat pump dryer typically has a lower In-use Energy Carbon Emissions Estimate than a vented dryer.



A PEACE OF MIND SALE
24 Hours 7 Days a Week Customer Support

T 0800 372 273 Wwww.fisherpaykel.com