Series 9 Contemporary Tall Built-under Dishwasher

Series 9 | Contemporary

Stainless Steel



Designed to adapt to every load, this tall dishwasher with increased usable height offers flexible loading features, including stemware grippers and adjustable tines to provide exceptional care for everything from delicate glassware to heavily soiled cookware. With a 42dbA rating, it combines a Triple Wash System, Auto Cycle sensing, AutoDry+, Air Curtain technology, variable wash pressure and independent spray arms to deliver precise cleaning and drying performance.

- Increased usable height and telescopic slides offer more flexibility to fit dishes up to 325mm
- Triple Wash System, AutoDry+ and Air Curtain deliver perfect results for both cleaning and drying
- Quiet 42dBA noise rating and LED lighting, ideal for open plan kitchens
- Connect via Wi-Fi and the SmartHQ™ app to access energy usage insights and guidance
- For added peace of mind, Aqua Stop automatically shuts off the water if a leak is detected

DIMENSIONS

Height	857 - 917 mm
Width	598 mm
Depth	580 mm

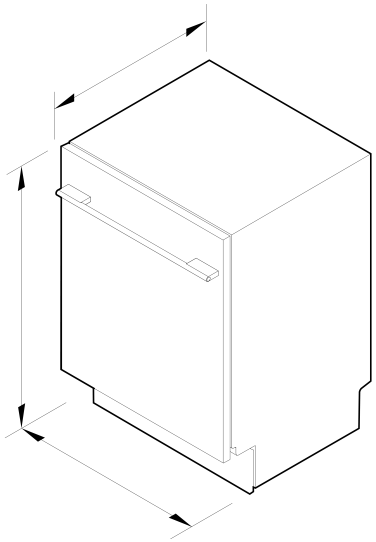

FEATURES & BENEFITS

80 YEARS OF CLEAN DISHES

In our distinct and timeless Contemporary style, this dishwasher reflects 80 years of dishwashing expertise. A proud handle creates a confident visual statement to complement a range of interiors, while the Auto Cycle draws on decades of research into the science of clean dishes, automatically adjusting wash conditions for consistent cleaning performance and efficient use of resources.

ENGINEERED FOR LIFE

Trust is earned over time through consistent results. That's why our team of scientists test wash performance using over 100,000 pieces of cutlery and crockery each year. Carefully measuring soil removal, water use and energy use, we continuously refine our cycles to deliver proven consistency, wash after wash, transforming routine into ritual.

ULTIMATE FLEXIBILITY

No two days in the kitchen are the same, so your dishwasher needs to adapt. With increased usable height, there's more flexibility to fit larger cookware and taller dishes up to 325mm with ease. Telescopic slides, a flexible cutlery tray, height-adjustable middle basket, plus cup racks and pitch-adjustable foldable tines let you tailor the interior to each load. Secure smaller items easily and create a layout that works for everything from everyday meals to larger clean-ups.

QUIET AND CONSIDERED

Open-plan kitchens call for appliances that work quietly and beautifully. With a very low 42dBA noise rating thanks to the BLDC motor with fewer moving parts, this dishwasher is designed to operate with minimal noise and not disrupt your household. For better visibility when loading or unloading, internal LED lighting provides gentle illumination inside, making contents easy to see at a glance.

TRIPLE WASH SYSTEM

The rule of thirds is a principle of balance in design, where three elements work together to create harmony. Inspired by this, our Triple Wash System brings together three racks, three independent spray arms and three-stage filtration to work harmoniously inside the dishwasher. With balanced coverage across every level, the result is consistent cleaning performance in every load.

EXCEPTIONAL DRYING PERFORMANCE

Clean dishes are the result of more than just the wash, with drying a crucial final step in the process. AutoDry+ automatically opens the door and uses a fan to circulate air at the end of the cycle, releasing steam to support more effective drying with minimal energy use. Air Curtain channels steam away from surrounding cabinetry, delivering dishes that are clean, dry, and ready to be put away.

CUSTOM CYCLE SELECTION

Not every load demands the same approach. Variable wash pressure and independent spray arms work together to deliver targeted cleaning performance, adapting water flow and force for everything from delicate glassware to heavily soiled cookware. Eco Cycle balances time and energy for a thorough clean while using up to 45% less energy than the Medium cycle, while the Sanitise modifier is proven to kill 99.9% of bacteria in the final rinse.

CONNECTED ENERGY INSIGHTS

Designed to work beyond the kitchen, this dishwasher offers energy insights through Wi-Fi and the SmartHQ™ app. Understand the estimated energy usage of each cycle before it begins, track consumption over time with daily, weekly or monthly energy insights, and discover simple ways to reduce energy use through helpful tips and guidance. Providing greater visibility into everyday energy consumption, it helps you make more informed decisions about how and when you run your dishwasher.

SPECIFICATIONS

Accessories (included)

Cutlery basket	•
Kickstrip	true

Capacity and loading

Accommodates angled platters or baking trays up to (lower basket)	370 mm
Accommodates round plates up to (lower basket)	325mm
Accommodates round plates up to (top basket)	220mm (with cutlery tray)
Adjustable height, foldable cupracks	•
Easy lift adjustable upper basket	•
Fold down tines	•
Full width cutlery/utensil tray	•
Height adjustable rear wine glass supports	•
Large crockery insert in lower basket	•
Pitch adjustable tines	•
Place settings	15
Place settings	15
Telescopic slides	•
Wine glass supports with stemware grippers	•

Connected Features

Alerts and notifications	•
Education and onboarding	•
Energy consumption monitoring	•
Monitoring	•
Remote operation	•
Software updates	•

Consumption

Energy rating	4.5 star
Energy usage	206kWh/year
In-use energy carbon emissions estimate	19.6kgCO2e/year
Water consumption (per wash cycle)	11.1L
Water rating	5.5 star (WELS)

Controls

Energy saving delay start option of up to 24 hours	•
Floor light cycle feedback	•
Internal light	•
Internal wash selector	•
Keylock	•
Rinse aid indicator light	•
Smart appliance	•

Features

Air curtain for bench protection	•
Aquastop	•
Auto Door Open Dry	•
Fan assisted drying	•
Flood protection	•
Fully independent spray arms	•
Half load option	•
Internal tub material	Stainless Steel
Motor type	BLDC
Three-stage filtration system	•
Variable wash pressure technology	•

Performance

Noise emissions	42 dBA

Power requirements

Dedicated Circuit (A)	10A
Supply frequency	50 Hz
Voltage	220 - 240V

Product dimensions

Depth	580 mm

Height	857 - 917 mm
Width	598 mm

Wash Program Modifiers

Dry +	•
Half load	•
Intensive	•
Sanitise	•
Wash modifiers	4

Wash Programs

60 min	•
Auto	•
Eco	•
Glassware	•
Heavy	•
Light	•
Medium	•
Rinse	•
Wash programs	8

Water connection

Water pressure	30kPa - 1000 kPa
Water supply	3/4" BSP (20mm) Connector Water Inlet Hose

SKU	85796

The product dimensions and specifications in this page apply to the specific product and model. Under our policy of continuous improvement, these dimensions and specifications may change at any time. You should therefore check with Fisher & Paykel's Customer Care Centre to ensure this page correctly describes the model currently available. © Fisher & Paykel Appliances Ltd 2020

Other product downloads available at fisherpaykel.com

- Care & Maintenance (English)
- 2D-DWG
- 2D-DXF
- Energy and Water Label
- First Use (English)
- Installation Guide (English)
- Planning Guide (English)
- Revit
- Rhino
- Safety & Warnings (English)
- Sketchup

Where applicable:

All appliances use energy, and energy usage typically generates carbon emissions. **Fisher & Paykel Appliances' In-use Energy Carbon Emissions Estimate** indicates carbon emissions from a product's in-use energy. This is calculated either annually or per cycle, using the product's market-specific energy label energy consumption data multiplied by the carbon emissions factor for energy in your country or region.

Our In-use Energy Carbon Emissions Estimate is designed to assist customers in making informed purchasing decisions when comparing different Fisher & Paykel products. For example, a heat pump dryer typically has a lower In-use Energy Carbon Emissions Estimate than a vented dryer.

24/7

A PEACE OF MIND SALE
24 Hours 7 Days a Week Customer Support
T 0800 372 273 Wwww.fisherpaykel.com