30" Series 7 Contemporary Self-Cleaning Oven, 9 Function

Contemporary



This built-in oven has a large capacity and multiple functions, to ensure every dish is cooked to perfection.

- 4.1 cu ft total capacity
- Nine oven functions including Aero™ Broil and Aero™ Pastry
- High-temperature self-cleaning function breaks down food residue for an easy clean
- Non-tip, full-extension shelves for safe removal of hot dishes

DIMENSIONS

Height	**27 1/16 "**
Width	**29 29/32 "**
Depth	**23 29/32 "**

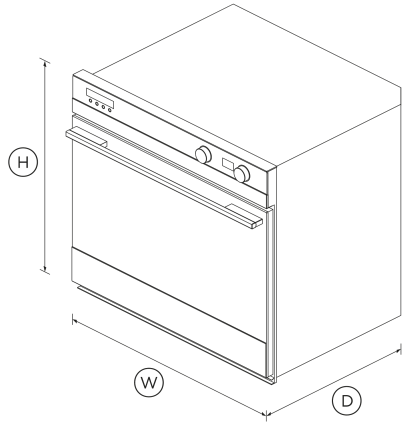

FEATURES & BENEFITS

Even Cooking

Our built-in ovens feature AeroTech™ - a technology that circulates heat evenly, ideal for multi-shelf cooking.

Self Cleaning

The self-clean function breaks down food residue at a very high temperature, leaving a light ash that's easily removed with a damp cloth. For best results, wipe down the inside of your oven door before you use the self-clean function.

Sized To Suit

Designed for multi-shelf cooking, this is one of the largest built-in ovens on the market providing 4.1 cu.ft of total capacity. The higher internal cavity allows you to fit a large casserole dish, the family roast and a pie for dessert.

Safe And Sound

The CoolTouch door with triple glazing and cooling system is safe to touch from the outside, protecting your hands and the surrounding cabinetry. Getting large dishes in and out of the oven is a breeze with full telescopic sliding shelves that stay perfectly steady – even when pulled all the way out.

Complementary Design

With their premium handle styling and stainless steel finish, our built-in ovens are designed to match the rest of Fisher & Paykel's kitchen appliance family.

Cooking Flexibility

This built-in oven has nine functions with pre-set temperatures, including Bake, Classic Bake and Aero™ Broil allowing you to use a variety of cooking styles.

SPECIFICATIONS

Capacity

Shelf positions	**8**
Total capacity	**4 cu ft**

Cleaning

Acid resistant graphite enamel	•
Pyrolytic self-clean	•
Removable oven door	•
Removable side ladders	•

Consumption

Energy usage	**350kWh/year**
In-use energy carbon emissions estimate	**40.4kgCO2e/year**

Controls

Audio feedback	•
Automatic cooking/minute timer	•
Automatic pre-set temperatures	•
Celsius/Fahrenheit temperature	•
Electronic capacitive touch controls	•
Electronic clock	•
Electronic oven control	•
Intuitive touchscreen display	•

Functions

Aero Broil	•
Aero Pastry	•
Aero™ Bake	•
Bake	•
Classic bake	•
Dehydrate	•
Maxi Broil	•
Number of functions	**9**
Pyrolytic self-clean	•
True Aero	•
Warm	•

Performance

AeroTech™ technology	•
Automatic rapid pre-heat	•
Broil power	**4400 W**

Power requirements

Amperage	**19.5 A**
Supply frequency	**60 Hz**
Supply voltage	**208 - 240 V**

Product dimensions

Depth	**23 29/32 "**
Height	**27 1/16 "**
Width	**29 29/32 "**

Safety

Balanced oven door	•
Catalytic venting system	•
Control panel key lock	•
CoolTouch door	•
Non-tip shelves	•

SKU	81512

The product dimensions and specifications in this page apply to the specific product and model. Under our policy of continuous improvement, these dimensions and specifications may change at any time. You should therefore check with Fisher & Paykel's Customer Care Centre to ensure this page correctly describes the model currently available. © Fisher & Paykel Appliances Ltd 2020

Other product downloads available at fisherpaykel.com

- DWG
- DXF
- Archicad
- Data Sheet (English)
- Revit
- SketchUp
- User Guide (Canadian French)
- User Guide (English)

Where applicable:

All appliances use energy, and energy usage typically generates carbon emissions. **Fisher & Paykel Appliances' In-use Energy Carbon Emissions Estimate** indicates carbon emissions from a product's in-use energy. This is calculated either annually or per cycle, using the product's market-specific energy label energy consumption data multiplied by the carbon emissions factor for energy in your country or region.

Our In-use Energy Carbon Emissions Estimate is designed to assist customers in making informed purchasing decisions when comparing different Fisher & Paykel products. For example, a heat pump dryer typically has a lower In-use Energy Carbon Emissions Estimate than a vented dryer.



A PEACE OF MIND SALE

24 Hours 7 Days a Week Customer Support

T 1.888.936.7872 **W**www.fisherpaykel.com