60cm Series 9 Minimal Pyrolytic Oven

Series 9 | Minimal

Black



A highlight of the Fisher & Paykel collection, this Series 9 oven ensures that every dish you create is cooked to perfection.

- 85L total capacity, with 11 oven functions including Pizza Bake and Roast
- Moisture level control with ActiveVent™ technology
- Pyrolytic self-cleaning function breaks down food residue for an easy clean
- Non-tip, full-extension shelves for safe removal of hot dishes

DIMENSIONS

Height	598 mm
Width	596 mm
Depth	565 mm

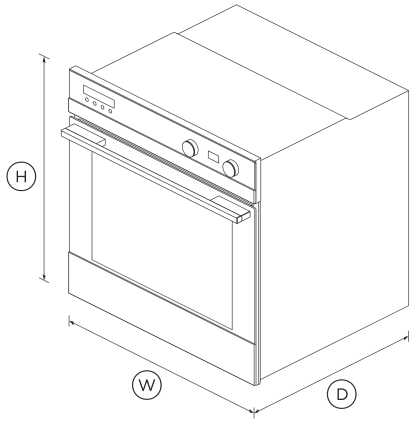

FEATURES & BENEFITS

Multi-Function Flexibility

11 functions including Roast, Pastry Bake and Fan Forced mean no matter what you're cooking, you've got the right heat to match.

Beauty Of Choice

With the choice of stylish stainless steel or elegant black, you can choose the finish that complements your kitchen design best.

Generous Capacity

With a generous sized internal cavity, you can create several dishes at once using multiple shelves.

Activevent Technology

With ActiveVent™ technology for optimised moisture levels and AeroTech™ for even heat distribution, you'll get perfect results even when using multiple shelves.

Simple Cleaning

Pyrolytic self-clean breaks down food residue at a very high temperature, leaving a light ash that's easily removed with a damp cloth.

Safe And Sound

The CoolTouch door features triple glazing and a cooling system that ensures it's safe to touch from the outside – protecting both your hands and the surrounding cabinetry.

SPECIFICATIONS

Accessories (included)

Full extension sliding shelves	2 sets
Grill rack	1 set
Roasting dish	1
Smokeless grill tray	1
Step down wire shelf	1
Wired temperature sensor	1

Accessories (sold separately)

Optional Accessory round handle	Part 81645

Capacity

Shelf positions	6
Total capacity	85 L
Usable capacity	72 L

Cleaning

Acid resistant graphite enamel	•
Pyrolytic self-clean	•
Removable oven door	•
Removable oven door inner glass	•
Removable side ladders	•

Controls

Audio feedback	•
Automatic cooking/minute timer	•
Automatic pre-set temperatures	•
Celsius/Fahrenheit temperature	•
Electronic clock	•
Electronic oven control	•
Soft close doors	•

Functions

Bake	•
Classic bake	•
Fan bake	•
Fan forced	•
Fan grill	•
Grill	•
Number of functions	11
Pastry Bake	•
Pyrolytic self-clean (Function)	•
Roast	•
Vent bake	•
Warm	•

Performance

ActiveVent™ system	•
AeroTech™ technology	•
Automatic rapid pre-heat	•
Grill power	3000 W
Whisper quiet cooking	•

Power requirements

Amperage	15 A
Supply frequency	50 Hz
Supply voltage	220 - 240 V

Product dimensions

Depth	565 mm
Height	598 mm
Width	596 mm

Safety

Balanced oven door	•
Catalytic venting system	•
Control panel key lock	•
CoolTouch door	•
Non-tip shelves	•

SKU	82144

The product dimensions and specifications in this page apply to the specific product and model. Under our policy of continuous improvement, these dimensions and specifications may change at any time. You should therefore check with Fisher & Paykel's Customer Care Centre to ensure this page correctly describes the model currently available. © Fisher & Paykel Appliances Ltd 2020

Other product downloads available at fisherpaykel.com

- DXF
- Data Sheet (English)
- DWG
- Installation Guide (English)
- User Guide (English)

Where applicable:

All appliances use energy, and energy usage typically generates carbon emissions. **Fisher & Paykel Appliances' In-use Energy Carbon Emissions Estimate** indicates carbon emissions from a product's in-use energy. This is calculated either annually or per cycle, using the product's market-specific energy label energy consumption data multiplied by the carbon emissions factor for energy in your country or region.

Our In-use Energy Carbon Emissions Estimate is designed to assist customers in making informed purchasing decisions when comparing different Fisher & Paykel products. For example, a heat pump dryer typically has a lower In-use Energy Carbon Emissions Estimate than a vented dryer.

24/7

A PEACE OF MIND SALE
24 Hours 7 Days a Week Customer Support

T 0800 372 273 Wwww.fisherpaykel.com