Dual Fuel Range, 48", 5 Burners with Griddle

Professional



A striking addition to your kitchen, with five powerful gas burners and two convection ovens for a combined capacity of 6.9 cu ft.

- Top burner heat of 19,000 BTU, for seriously fast boiling
- 6.9 cu ft total oven capacity across two oven cavities
- Non-tip full-extension shelves in main cavity for safe removal of hot dishes

DIMENSIONS

Height	**35 3/4 - 36 3/4 "**
Width	**47 7/8 "**
Depth	**29 1/8 "**

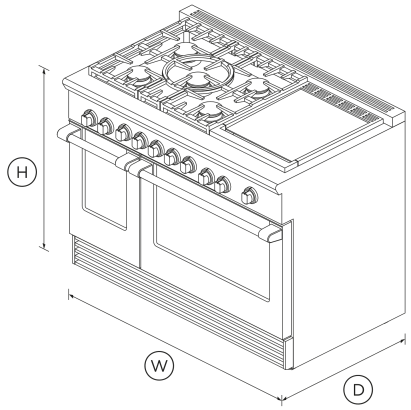

SPECIFICATIONS

Accessories (included)

Telescopic sliding runners	**true**

Accessories (sold separately)

Square handle option	**AH-R48**

Capacity

Shelf positions (main oven)	**5**
Shelf positions (second oven)	**5**

Cleaning

Pyrolytic self-clean	•

Consumption

Energy usage	**544kWh/year**
In-use energy carbon emissions estimate	**62.7kgCO2e/year**

Controls

Electric circuit	**4**
Metal illuminated dials	•

Main oven features

Concealed Element	•
Electronic oven control	•
Internal light	•
Large broil pan	•

Main oven functions

Bake	•
Broil	•
Clean	•
Convection bake	•
Convection broil	•
Number of oven functions	**6**
Self cleaning	•
True convection	•

Oven features

Auto re-ignition system	•

Oven performance

Bake power	**4600**
Broil	**3600 W**
Main oven - True convection power	**2500 W**

Power requirements

Amperage	**50 A**
Rated current	**50 A**
Supply frequency	**60 Hz**
Supply voltage	**120/240 V**

Product dimensions

Depth	**29 1/8 "**
Depth (excluding handles)	**2918 mm**
Height	**35 3/4 - 36 3/4 "**
Width	**47 7/8 "**

Rangetop features

Sealed Dual Flow Burners™	**5**
Sealed range top	•
Vent trim included	•

Safety

Full extension telescopic sliding shelves	•

Secondary oven features

Broil	•
Concealed element	•
Electronic oven control	•
Internal light	•

Secondary oven functions

Bake	•
Number of secondary oven functions	**3**
Proof	•

SKU 71361

The product dimensions and specifications in this page apply to the specific product and model. Under our policy of continuous improvement, these dimensions and specifications may change at any time. You should therefore check with Fisher & Paykel's Customer Care Centre to ensure this page correctly describes the model currently available. © Fisher & Paykel Appliances Ltd 2020

Other product downloads available at fisherpaykel.com

- DWG
- DXF
- Data Sheet Dual Fuel Range
- Installation Guide (English, Canadian French)
- Planning Guide (English)
- User Guide (English)
- User Guide (Canadian French)

Where applicable:

All appliances use energy, and energy usage typically generates carbon emissions. **Fisher & Paykel Appliances' In-use Energy Carbon Emissions Estimate** indicates carbon emissions from a product's in-use energy. This is calculated either annually or per cycle, using the product's market-specific energy label energy consumption data multiplied by the carbon emissions factor for energy in your country or region.

Our In-use Energy Carbon Emissions Estimate is designed to assist customers in making informed purchasing decisions when comparing different Fisher & Paykel products. For example, a heat pump dryer typically has a lower In-use Energy Carbon Emissions Estimate than a vented dryer.

24/7

A PEACE OF MIND SALE

24 Hours 7 Days a Week Customer Support

T 1.888.936.7872 **W**www.fisherpaykel.com