30" Series 7 Telescopic Downdraft Range Hood

Series 7 | Professional

Stainless Steel

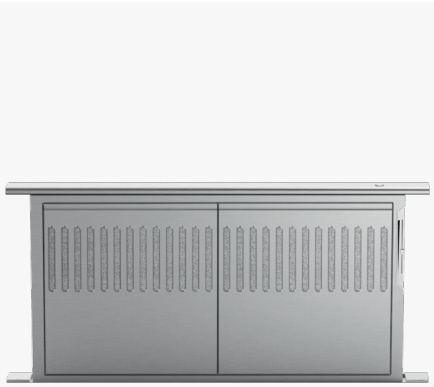

Perfectly hidden away behind your cooktop, this 30" downdraft range hood can be raised while cooking, for efficient extraction.

- Seamlessly integrates into your kitchen, sliding up from your cooktop when you need it
- Raises to 14" height for better steam, grease and odor-capture efficiency
- Pair with our internal 600CFM blower for quiet and effective extraction

DIMENSIONS

Depth	2 1/8 "

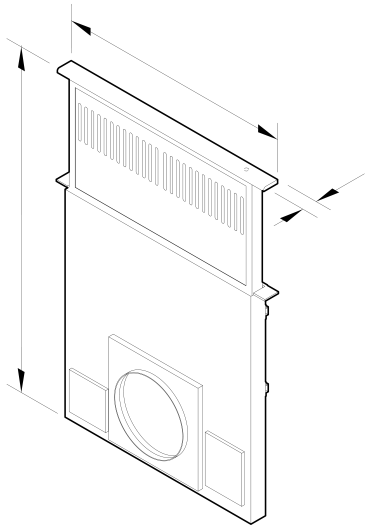

FEATURES & BENEFITS

Quiet And Effective

The downdraft system quickly and quietly extracts unwanted grease, smoke and odors through stainless steel mesh filters.

Simple Controls

A single on/off button makes the downdraft system easy to use. A slider control lets you precisely adjust the fan speed up or down.

Easy Cleaning

Filters effectively trap grease particles during extraction. They are easy to remove and dishwasher safe, or can be cleaned by hand in hot soapy water.

Complementary Design

When not in use, the downdraft system slides away into your countertop eliminating the need for a bulky overhead ventilation hood. The stainless steel finish is designed to match the rest of the Fisher & Paykel kitchen appliance family.

SPECIFICATIONS

Accessories (sold separately)

Internal blower	HBD600I

Installation and cleaning

Air outlet size	6" "
Ducted	Front or side extraction

Performance

Extraction type	Surface

Power requirements

Rated current	15 A
Supply frequency	60 Hz
Supply voltage	120 V

Product dimensions

Depth	2 1/8 "

SKU	50044

The product dimensions and specifications in this page apply to the specific product and model. Under our policy of continuous improvement, these dimensions and specifications may change at any time. You should therefore check with Fisher & Paykel's Customer Care Centre to ensure this page correctly describes the model currently available. © Fisher & Paykel Appliances Ltd 2020



A PEACE OF MIND SALE
24 Hours 7 Days a Week Customer Support
T 1.888.936.7872 Wwww.fisherpaykel.com

Other product downloads available at fisherpaykel.com

- DXF
- Data Sheet (English)
- DWG
- DXF
- Archicad
- Data Sheet (English)
- DWG
- Revit
- Rhino
- Right To Repair Declaration (English, Canadian French)
- SketchUp
- Installation & User Guide (English, Canadian French)

Where applicable:

All appliances use energy, and energy usage typically generates carbon emissions. **Fisher & Paykel Appliances' In-use Energy Carbon Emissions Estimate** indicates carbon emissions from a product's in-use energy. This is calculated either annually or per cycle, using the product's market-specific energy label energy consumption data multiplied by the carbon emissions factor for energy in your country or region.

Our In-use Energy Carbon Emissions Estimate is designed to assist customers in making informed purchasing decisions when comparing different Fisher & Paykel products. For example, a heat pump dryer typically has a lower In-use Energy Carbon Emissions Estimate than a vented dryer.