36" Series 7 Pyramid Chimney Wall Range Hood

Series 7 | Contemporary

Stainless Steel



The wall chimney range hood has a contemporary styling, extracting steam, grease and cooking odors quietly and efficiently.

- With four fan speeds, select the perfect extraction rate for your cooking
- Edge-to-edge extraction for increased performance
- Powerful 600CFM maximum airflow

DIMENSIONS

Height	25 13/16 - 43 1/16 "
Width	35 3/8 "
Depth	19 11/16 "

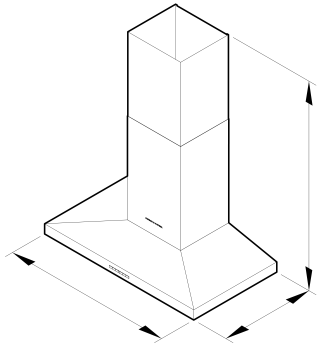

FEATURES & BENEFITS

Quiet And Effective

Odors can linger in the kitchen well after cooking is finished. This vent hood offers four fan speeds for powerful extraction to ensure steam and smells are quickly removed.

Easy Installation

This wall chimney vent hood is the perfect partner to your Fisher & Paykel cooktop. It can be either externally ducted or internally recirculated, making it perfect for apartments.

Simple To Clean

Three filters effectively trap grease particles during extraction. They are easy to remove and dishwasher safe, or can be cleaned by hand in hot soapy water.

Complementary Design

This wall chimney ventilation hood's sleek stainless steel finish will complement any contemporary kitchen and is designed to match the rest of Fisher & Paykel's kitchen appliance family.

SPECIFICATIONS

Fan ratings

Maximum sound rating	67 dBA

Installation and cleaning

Air outlet size	6 "
Dishwasher safe filters	3
Stainless steel filter cover	•
Two piece height adjustable flue	•

Performance

Extraction type	Surface
Fan speeds	4
Filter type	Mesh

Power requirements

Supply voltage	120 V

Product dimensions

Depth	19 11/16 "
Height	25 13/16 - 43 1/16 "
Width	35 3/8 "

Ventilation features

Light type	LED
Timer function	•

SKU	50131

The product dimensions and specifications in this page apply to the specific product and model. Under our policy of continuous improvement, these dimensions and specifications may change at any time. You should therefore check with Fisher & Paykel's Customer Care Centre to ensure this page correctly describes the model currently available. © Fisher & Paykel Appliances Ltd 2020

Other product downloads available at fisherpaykel.com

- DXF
- Archicad
- Data Sheet (English)
- DWG
- Revit
- Rhino
- Right To Repair Declaration (English, Canadian French)
- SketchUp
- Installation & User Guide (English, Canadian French)

Where applicable:

All appliances use energy, and energy usage typically generates carbon emissions. **Fisher & Paykel Appliances' In-use Energy Carbon Emissions Estimate** indicates carbon emissions from a product's in-use energy. This is calculated either annually or per cycle, using the product's market-specific energy label energy consumption data multiplied by the carbon emissions factor for energy in your country or region.

Our In-use Energy Carbon Emissions Estimate is designed to assist customers in making informed purchasing decisions when comparing different Fisher & Paykel products. For example, a heat pump dryer typically has a lower In-use Energy Carbon Emissions Estimate than a vented dryer.

24/7

A PEACE OF MIND SALE
24 Hours 7 Days a Week Customer Support

T 1.888.936.7872 Wwww.fisherpaykel.com