60cm Series 9 Contemporary Compact Combi-Steam Oven

Contemporary



Reduce the need for oils and fats with steam cooking. Its compact size makes this perfect to pair with a warming drawer.

- 36L total capacity
- Steam cooking allows you to cook a food in its own juices, to retain nutrients and flavour
- Cooking flexibility with nine oven functions, including five steam functions, plus Grill and Fan Forced.
- Designed to match aesthetically with companion products such as warming drawers, for flexible cooking configurations.

DIMENSIONS

Height	**458 mm**
Width	**596 mm**
Depth	**562 mm**

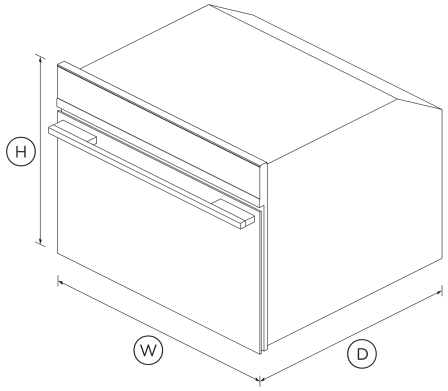

FEATURES & BENEFITS

Healthy Eating

The Steam Oven allows you to cook food in its own juices to retain nutrients and flavour, with the steam moisture reducing the need for additional oils or fats.

Sized To Suit

This compact 60cm Steam Oven can be placed almost anywhere. All companion products can be installed at a convenient height to suit your kitchen design and preference.

Simple To Use

An easy to use, intuitive display shows the time and provides useful information about functions along with a refill alert.

Easy Cleaning

Cleaning and care of the Steam Oven is easy. After each use, simply wipe the smooth stainless steel interior with a dry cloth.

Safe And Sound

Keep those inquisitive little hands safe. A child lock has been included in the design of this Built-in Steam Oven

Easy Installation

Plug in and cook straight away. The Steam Oven is easy to install, with no plumbing needed.

SPECIFICATIONS

Accessories (included)

Baking pan	**1**
Perforated large steam dish	**1**
Wire shelf	**1**
Wired temperature sensor	**1**

Accessories (sold separately)

Handle kit Contemporary round, aluminium	**Optional round handle**

Capacity

Shelf positions	**3**
Total capacity	**36 L**
Usable capacity	**29 L**

Cleaning

Easy clean stainless steel interior	•
Removable water tank	•
Steam clean (oven)	•

Controls

Automatic cooking/minute timer	•
Automatic pre-set temperatures	•
Celsius/Fahrenheit temperature	•
Delay start	•
Electronic clock	•
Electronic oven control	•
Guided cooking by food type and recipes	•
Halogen lights	•
Intuitive touchscreen display	•
Temperature sensor	•

Functions

Fan forced	•
Fan grill	•
Grill	•
Number of functions	**9**
Recipe function	•
Ring + grill	•
Steam + ring	•
Steam 100 (100°C / 210°F)	•
Steam 130 (130°C / 265°F)	•
Steam assist	•
Steam clean (oven)	•

Performance

Grill power	**1500 W**
SteamTechnology	•

Power requirements

Amperage	**15 A**
Supply frequency	**50 Hz**
Supply voltage	**220 - 240 V**

Product dimensions

Depth	**562 mm**
Height	**458 mm**
Width	**596 mm**

Safety

Control panel key lock	•
CoolTouch door	•
Safety thermostat	•

SKU	81341

The product dimensions and specifications in this page apply to the specific product and model. Under our policy of continuous improvement, these dimensions and specifications may change at any time. You should therefore check with Fisher & Paykel's Customer Care Centre to ensure this page correctly describes the model currently available. © Fisher & Paykel Appliances Ltd 2020

Other product downloads available at fisherpaykel.com

- DWG
- DXF
- Archicad
- Archicad - 600mm Trim
- Archicad - 760mm Trim
- Data Sheet (English)
- Installation Guide - Cavity Trim Kit (English)
- Installation Guide (English)
- Product Information Sheet
- Revit
- Revit - 600mm Trim
- Revit - 760mm Trim
- Rhino
- Rhino - 600mm Trim
- Rhino - 760mm Trim
- SketchUp
- SketchUp - 600mm Trim
- SketchUp - 760mm Trim
- User Guide (English)

Where applicable:

All appliances use energy, and energy usage typically generates carbon emissions. **Fisher & Paykel Appliances' In-use Energy Carbon Emissions Estimate** indicates carbon emissions from a product's in-use energy. This is calculated either annually or per cycle, using the product's market-specific energy label energy consumption data multiplied by the carbon emissions factor for energy in your country or region.

Our In-use Energy Carbon Emissions Estimate is designed to assist customers in making informed purchasing decisions when comparing different Fisher & Paykel products. For example, a heat pump dryer typically has a lower In-use Energy Carbon Emissions Estimate than a vented dryer.



A PEACE OF MIND SALE

24 Hours 7 Days a Week Customer Support

T 0800 372 273 **W**www.fisherpaykel.com