Freestanding Dishwasher

Contemporary



With flexible racking you can adjust to suit your load, and multiple wash features for beautifully clean dishes.

- Six wash programs to suit any load from Delicate to Heavy
- Auto option senses the optimum wash cycle for your dishes

DIMENSIONS

Height	**850 - 870 mm**
Width	**597 mm**
Depth	**600 mm**

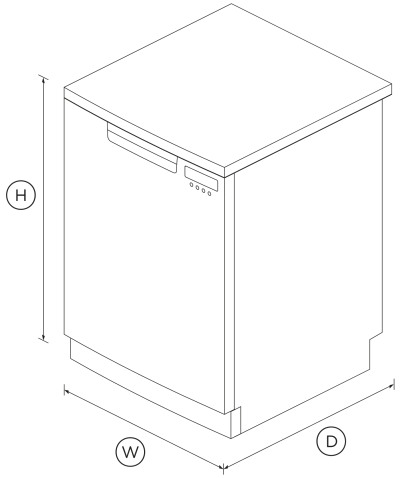

FEATURES & BENEFITS

A reliable wash

A three stage filtration system results in a superior clean. Cup racks, wine glass supports and cutlery basket allow safe and easy cleaning of everyday items. A rinse aid indicator reminds you to top up for squeaky-clean dishes.

Flexible wash options

This dishwasher offers six wash programs including Auto, which automatically senses the optimal wash cycle for your dishes.

Quiet performer

Running at a low decibel rate, these dishwashers do their job without making a fuss. Even the end of cycle alerts can be turned off.

Easy to load

Designed to fit 15 place settings, the middle basket, cup racks and wine glass holders are easily adjusted to accommodate different sized dishes.

SPECIFICATIONS

Accessories (included)

Cutlery basket	•

Capacity and loading

Accommodates round plates up to	**300mm**
Adjustable height, foldable cupracks	•
Easy lift adjustable upper basket	•
Fold down tines	•
Place settings	**15**
Place settings	**15**
Wine glass supports	•

Consumption

Energy rating	**3.5 star**
Energy usage	**286 kWh/year**
In-use energy carbon emissions estimate	**174.5kgCO2e/year**
Water consumption (per wash cycle)	**11.4L**
Water rating	**5 star (WELS)**

Controls

End of cycle beeps	•
Energy saving delay start option of up to 12 hours	•

Keylock	•
Rinse aid indicator light	•
Time remaining LED display	•

Features

Quiet operation	•
ThermoDry system	•
Three-stage filtration system	•
Variable wash pressure technology	•

Performance

Noise emissions	**47 dBA**

Power requirements

Amperage	**10A**
Supply frequency	**50Hz**
Supply voltage	**220 - 240V**

Product dimensions

Depth	**600 mm**
Height	**850 - 870 mm**
Width	**597 mm**

Wash Programs

Auto	•
Eco	•
Fast	•
Heavy	•
Medium	•
Rinse	•
Wash programs	**6**

Water connection

Water pressure	**100kPa - 1000kPa**
Water supply	**3/4" BSP (20mm) Connector Water Inlet Hose**

SKU	81634

The product dimensions and specifications in this page apply to the specific product and model. Under our policy of continuous improvement, these dimensions and specifications may change at any time. You should therefore check with Fisher & Paykel's Customer Care Centre to ensure this page correctly describes the model currently available. © Fisher & Paykel Appliances Ltd 2020

Other product downloads available at fisherpaykel.com

- Energy Label
- Installation Guide (English)
- Quick Start Guide (English)
- User Guide (English)

Where applicable:

All appliances use energy, and energy usage typically generates carbon emissions. **Fisher & Paykel Appliances' In-use Energy Carbon Emissions Estimate** indicates carbon emissions from a product's in-use energy. This is calculated either annually or per cycle, using the product's market-specific energy label energy consumption data multiplied by the carbon emissions factor for energy in your country or region.

Our In-use Energy Carbon Emissions Estimate is designed to assist customers in making informed purchasing decisions when comparing different Fisher & Paykel products. For example, a heat pump dryer typically has a lower In-use Energy Carbon Emissions Estimate than a vented dryer.

24/7

A PEACE OF MIND SALE

24 Hours 7 Days a Week Customer Support

T 1300 650 590 **W**www.fisherpaykel.com