90cm Series 5 Classic 4 Zone Induction Cooker

Series 5 | Classic

Stainless Steel



Heritage styling paired with contemporary performance, in a freestanding cooker with large convection oven and induction cooktop.

- Large induction cooktop with four cooking zones
- Convection oven with 140L total capacity and seven oven functions including Fan Bake
- Optional non-tip full-extension shelves for safe removal of hot dishes

DIMENSIONS

Height	898 - 946 mm
Width	897 mm
Depth	600 mm

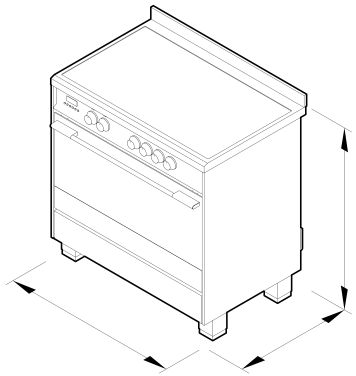

FEATURES & BENEFITS

Quality And Durability

This freestanding cooker has been carefully crafted in every detail from performance to durability, using quality materials including the balanced door and finely tuned dials.

Impressive Capacity

With an extra large 140L capacity, this freestanding cooker has plenty of space for cooking multiple dishes at the same time.

Power & Control

Instant and immediate control from the highest to the gentlest heat. The finely tuned cooktop controls let you sear and stir fry over powerful heat, or simmer a delicate sauce to perfection.

Even Heat

Dishes on the top shelf turn out as perfectly as the ones on the bottom, due to our AeroTech™ convection system that circulates air evenly throughout the entire oven.

Easy To Clean

Cleaning up spills is effortless. Your cooktop simply needs a quick wipe to keep it looking good as new for years to come.

Safe And Sound

The door and cavity cooling system keeps the heat on the inside, protecting your hands and surrounding cabinetry.

SPECIFICATIONS

Accessories (included)

Chromed shelf runners	1 set
Flat wire shelf	1
Grill rack	TRUE
Roasting dish	1
Square foot covers, stainless steel	1
Step down wire shelf	•

Accessories (sold separately)

Full extension sliding shelves	Optional (part 578744)
Full extension telescopic shelves	Optional (part 578744)
Kick strip, stainless steel (optional)	KICKOR90X1

Capacity

Shelf positions	6
Shelf positions (main oven)	6
Total capacity	140 L
Usable capacity	120 L
Usable capacity (main oven)	121 L

Cleaning

Acid resistant graphite enamel	•
Drop down grill element	•
Flat easy clean glass surface	•
Removable oven door	•
Removable oven door inner glass	•
Removable shelf runners	•

Controls

Audio feedback	•
Automatic cooking/minute timer	•
Celsius/Fahrenheit temperature	•
Electronic clock	•
Laser etched graphics	•
Sabbath mode	•
Toughened fused glass graphics	•

Installation Dimensions

Installation cutout dimensions (Depth)	600 mm
Installation cutout dimensions (Width)	900 mm

Oven features

AeroTech™ technology	•
Electronic oven control	•
Full extension telescopic sliding shelves	•
Storage compartment	•
True convection	•
Twin cavity fans	•
Warming drawer	•

Oven functions

Bake	•
Defrost	•
Fan bake	•
Fan forced	•
Fan grill	•
Grill	•
Number of functions	7
Warm	•

Oven performance

CoolTouch door	Double glazed

Power requirements

Connection	Terminal Block
Service	46 A
Supply	220 - 240 V, 50 Hz

Product dimensions

Depth	600 mm
Height	898 - 946 mm
Width	897 mm

Rangetop features

Auto heat reduce	•
Dual colour display	•
Gentle heat	•
Heat settings	9
Hob rail	•
Hob rear trim	60 mm
Induction cooking technology	•
SmartZone	TRUE
Zone bridging	•

Rangetop Performance

Centre	2300 W
Left front	1600 W
Left rear	2100 W
PowerBoost	•

Safety

Advanced cooling system	•
Anti-tilt bracket	•
Balanced oven door	•
Catalytic venting system	•
Child lock	•
CoolTouch door	•
Non-tip shelves	•
Pan detection system	•
Safety time out	•
Spill containment	12 L
Spillage auto off	•
Surface hot indicators	•

SKU	81679

The product dimensions and specifications in this page apply to the specific product and model. Under our policy of continuous improvement, these dimensions and specifications may change at any time. You should therefore check with Fisher & Paykel's Customer Care Centre to ensure this page correctly describes the model currently available. © Fisher & Paykel Appliances Ltd 2020

Other product downloads available at fisherpaykel.com

- Installation Guide (English)
- Installation Guide - Kick Strip (English)
- Revit
- Rhino
- SketchUp
- User Guide (English)

Where applicable:

All appliances use energy, and energy usage typically generates carbon emissions. **Fisher & Paykel Appliances' In-use Energy Carbon Emissions Estimate** indicates carbon emissions from a product's in-use energy. This is calculated either annually or per cycle, using the product's market-specific energy label energy consumption data multiplied by the carbon emissions factor for energy in your country or region.

Our In-use Energy Carbon Emissions Estimate is designed to assist customers in making informed purchasing decisions when comparing different Fisher & Paykel products. For example, a heat pump dryer typically has a lower In-use Energy Carbon Emissions Estimate than a vented dryer.



A PEACE OF MIND SALE
24 Hours 7 Days a Week Customer Support

T 0800 372 273 Wwww.fisherpaykel.com