5" Series 11 Modular Auxiliary Downdraft Rangehood

Series 11 | Minimal

Black

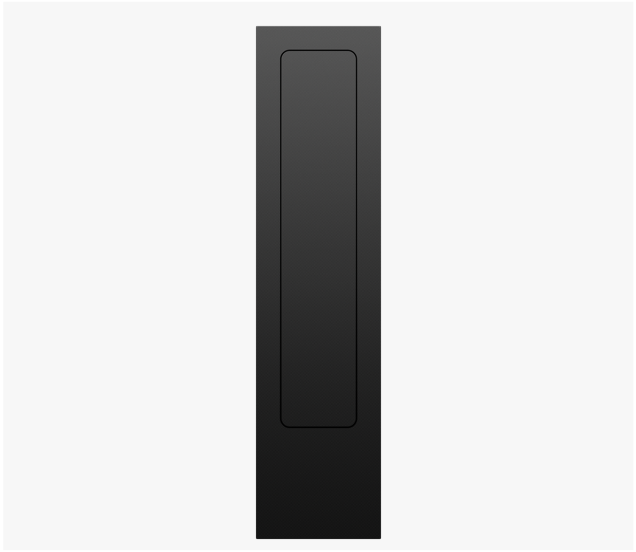

With powerful extraction, this ventilation module fits seamlessly into your countertop. Designed to pair with a Primary Modular Induction Cooktop for the ultimate culinary solution.

- Part of our unique modular cooking solution. Pair with a primary cooktop for a unified cooking experience
- Seamless kitchen integration, without the need for overhead ventilation
- Links to adjacent cooktop modules, with automatic extraction at the right speed to suit your cooking
- With five fan speeds and a boost function for effective removal of odors and steam

DIMENSIONS

Height	7 3/8 "
Width	5 1/8 "
Depth	20 7/8 "

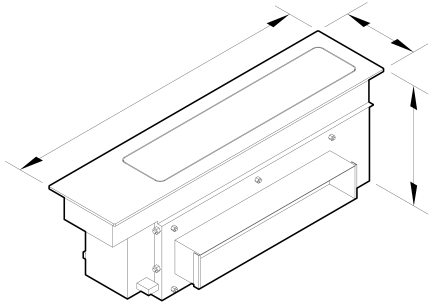

FEATURES & BENEFITS

Modular Design Freedom

Enhance your cooking space with downdraft ventilation. These modules can be discreetly positioned alongside your primary cooktop and auxiliary modules, ensuring a fresh environment regardless of your chosen cooking method. Tailor your setup to reflect the way you live, cook, and entertain.

Sleek And Subtle

Redefine your kitchen's aesthetic with the black glass downdraft ventilation module. Seamlessly integrated into the countertop and alongside cooktop modules, it allows for an open-style, social kitchen design.

Design Versatility

Ideal for layouts where traditional overhead hoods pose challenges, this ventilation module pairs beautifully with island cooktops and open kitchens. Its ability to retract or hide ensures a cleaner, more open appearance, enhancing your kitchen's functionality and design.

Intuitive Extraction

Simply open the cover and enjoy convenient extraction with Link Mode. The fan intuitively activates, adjusting its speed according to the power levels of nearby cooktop zones, eliminating the need for manual adjustments. Even after you have finished cooking, the fan remains active to capture any remaining vapors.

Quiet Efficiency

The auxiliary ventilation module operates efficiently and discreetly in the background, seamlessly controlled via the primary module touchscreen. With five fan speeds plus a boost function, it quickly removes steam, odors, and grease.

Prolonged Freshness

A Delayed Off timer ensures that cooking smells continue to be extracted even after you've finished cooking. Additionally, the timer will automatically shut off the ventilation after a preset time, reducing energy waste if you forget to turn it off.

Easy To Clean

The nine-layer filter effectively traps grease particles during extraction. Designed for simple removal, the filters are easy to clean and dishwasher safe.

SPECIFICATIONS

Fan ratings

Maximum air movement	330 CFM
Maximum speed sound rating	9 sones

Installation and cleaning

Air outlet size	3.25" x 12" (Included), 2.25" x 12" (Optional) "
Dishwasher safe filters	1

Performance

Extraction type	Surface
Fan speeds	5 + Boost
Filter type	Mesh with Stainless Steel filter cover
Number of filters	1

Power requirements

Connection	Flex cord, 3-pin plug
Service	5 A
Supply frequency	60 Hz
Supply voltage	120 V

Product dimensions

Depth	20 7/8 "
Height	7 3/8 "
Width	5 1/8 "

Ventilation features

Auto-off/Run-on timer	•
Bluetooth connectivity	•
Modular compatibility	Auxiliary
Modular design	•
Timer function	•

SKU 82834

The product dimensions and specifications in this page apply to the specific product and model. Under our policy of continuous improvement, these dimensions and specifications may change at any time. You should therefore check with Fisher & Paykel's Customer Care Centre to ensure this page correctly describes the model currently available. © Fisher & Paykel Appliances Ltd 2020

Other product downloads available at fisherpaykel.com

- DXF
- DWG
- Installation Guide (English)
- Installation Guide (English)
- Installation Guide - Multiple Product with Downdraft Ventilation (Canadian French)
- Installation Guide - Multiple Product Setup with Downdraft Ventilation (Spanish)
- Planning Guide (English)
- Planning Guide (Spanish)
- Planning Guide (Canadian French)
- California Warning Proposition 65 (English, Spanish, Canadian French, Chinese)
- Revit
- Right To Repair Declaration (English, Canadian French)
- User Guide - Recirculation Kit (English)
- User Guide - Multiple Product Setup (English)
- User Guide - Primary Modular Cooktop (English)
- User Guide - Multiple Product Setup (Canadian French)
- User Guide (Canadian French)
- User Guide - Multiple Product Setup (Spanish)
- User Guide (Spanish)

Where applicable:

All appliances use energy, and energy usage typically generates carbon emissions. **Fisher & Paykel Appliances' In-use Energy Carbon Emissions Estimate** indicates carbon emissions from a product's in-use energy. This is calculated either annually or per cycle, using the product's market-specific energy label energy consumption data multiplied by the carbon emissions factor for energy in your country or region.

Our In-use Energy Carbon Emissions Estimate is designed to assist customers in making informed purchasing decisions when comparing different Fisher & Paykel products. For example, a heat pump dryer typically has a lower In-use Energy Carbon Emissions Estimate than a vented dryer.

24/7

A PEACE OF MIND SALE
24 Hours 7 Days a Week Customer Support

T 1.888.936.7872 Wwww.fisherpaykel.com