60cm Series 9 Minimal Compact Combi-Steam Oven

Series 9 | Minimal

Black



Reduce the need for oils and fats with steam cooking, paired with convection oven functions for cooking flexibility.

- 36L total capacity
- Cooking flexibility with nine oven functions, including five Steam functions, Grill and Fan Forced
- Steam cooking allows you to cook a food in its own juices, to retain nutrients and flavour
- Designed to match aesthetically with companion products such as warming drawers, for flexible cooking configurations

DIMENSIONS

Height	458 mm
Width	596 mm
Depth	562 mm

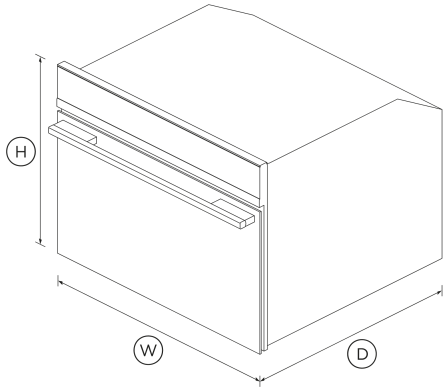

FEATURES & BENEFITS

Sized To Suit

The compact 46cm height means this Combination Steam Oven can be placed almost anywhere. companion products share the same dimensions and can be installed in multiple configurations to suit your kitchen design and preference.

Cooking Flexibility

The Combination Steam Oven allows ingredients to retain their nutrients, moisture content and colouration. With nine oven modes, it doesn't just Steam, but also has Grill and Fan functions.

Easy To Use

An easy to use, intuitive display shows the time and provides useful information about functions along with a refill alert.

Beauty Of Choice

With the choice of a stylish stainless steel or elegant black trim, our companion products help you achieve a coherent kitchen aesthetic that suits your design style.

Easy Cleaning

Cleaning and care of the Combination Steam Oven is easy. Simply wipe the smooth stainless steel interior with a dry cloth after each use.

Safe And Sound

The CoolTouch door is safe to touch from the outside, protecting your hands and the surrounding cabinetry.

SPECIFICATIONS

Accessories (included)

Baking pan	1
Perforated large steam dish	1
Wire shelf	1
Wired temperature sensor	1

Accessories (sold separately)

Optional 76cm/30" trim kit	Part 81940

Capacity

Shelf positions	3
Total capacity	36 L
Usable capacity	29 L

Cleaning

Easy clean stainless steel interior	•
Removable water tank	•
Steam clean (oven)	•

Controls

Adjustable audio and display settings	•
Automatic cooking/minute timer	•
Automatic pre-set temperatures	•
Celsius/Fahrenheit temperature	•
Delay start	•
Electronic capacitive touch controls	•
Electronic clock	•
Electronic oven control	•
Guided cooking by food type and recipes	•
Halogen lights	•
Intuitive touchscreen display	•
Temperature sensor	•

Functions

Fan forced	•
Fan grill	•
Grill	•
Number of functions	9
Ring + grill	•
Steam + ring	•
Steam 100 (100°C / 210°F)	•
Steam 130 (130°C / 265°F)	•
Steam assist	•
Steam clean (oven)	•

Performance

Grill power	1500 W
SteamTechnology	•

Power requirements

Amperage	15 A
Supply frequency	50 Hz
Supply voltage	220 - 240 V

Product dimensions

Depth	562 mm
Height	458 mm
Width	596 mm

Safety

Control panel key lock	•
CoolTouch door	•
Safety thermostat	•

SKU	81924

The product dimensions and specifications in this page apply to the specific product and model. Under our policy of continuous improvement, these dimensions and specifications may change at any time. You should therefore check with Fisher & Paykel's Customer Care Centre to ensure this page correctly describes the model currently available. © Fisher & Paykel Appliances Ltd 2020

Other product downloads available at fisherpaykel.com

- DXF
- Archicad
- Archicad - Bottom Trim
- Archicad - 760mm Trim
- Data Sheet (English)
- DWG
- Installation Guide (English)
- Installation Guide (English)
- Installation Guide (English)
- Revit
- Revit - 600mm Trim
- Revit - 760mm Trim
- Rhino
- Rhino - 600mm Trim
- Rhino - 760mm Trim
- SketchUp
- SketchUp - 600mm Trim
- SketchUp - 760mm Trim
- User Guide (English)

Where applicable:

All appliances use energy, and energy usage typically generates carbon emissions. **Fisher & Paykel Appliances' In-use Energy Carbon Emissions Estimate** indicates carbon emissions from a product's in-use energy. This is calculated either annually or per cycle, using the product's market-specific energy label energy consumption data multiplied by the carbon emissions factor for energy in your country or region.

Our In-use Energy Carbon Emissions Estimate is designed to assist customers in making informed purchasing decisions when comparing different Fisher & Paykel products. For example, a heat pump dryer typically has a lower In-use Energy Carbon Emissions Estimate than a vented dryer.

24/7

A PEACE OF MIND SALE
24 Hours 7 Days a Week Customer Support

T 0800 372 273 Wwww.fisherpaykel.com