Single DishDrawer Dishwasher, Sanitise

Contemporary



Designed to fit even full-sized dinner plates, this DishDrawer™ can be placed anywhere in your kitchen, for loading dishes with less bending.

- Six wash programs, as well as additional Quick wash, Sanitise and Extra Dry options
- Flexible racking allows you to customise internal shelves to suit your needs

DIMENSIONS

Height	**410 mm**
Width	**599 mm**
Depth	**573 mm**

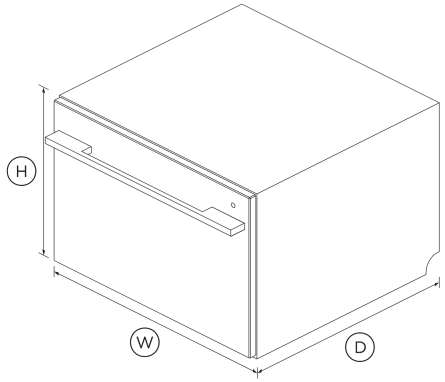

FEATURES & BENEFITS

Ease of use

DishDrawer™ Dishwashers are as easy to open and close as kitchen drawers and can be conveniently positioned at bench height for ease of loading and minimal bending. Flexible racking allows you to make adjustments to fit in a variety of dishes.

Seamless integration

DishDrawer™ Dishwashers can be installed in any kitchen space and are designed to match the Fisher & Paykel family of kitchen appliances, with matching handles, premium styling and quality materials.

Seamless integration

DishDrawer™ Dishwashers can be installed in any kitchen space and are designed to match the Fisher & Paykel family of kitchen appliances, with matching handles, premium styling and quality materials.

Quick, Sanitise and Extra Dry options

The Quick wash modifier delivers a faster wash while maintaining performance. The Sanitise option provides extra protection killing 99.9% of bacteria in the final rinse. The Extra Dry setting is perfect for plastic dishes.

Quiet performer

Running at a very low decibel rate, these DishDrawer™ Dishwashers do their job without making a fuss. The combination of intelligent technology and simple mechanics means greater reliability and excellent wash performance.

SPECIFICATIONS

Accessories (included)

Cutlery basket	•
Kickstrip	**true**
Knife clip and multipurpose clip	•

Capacity and loading

Accommodates round plates up to	**280mm**
Adjustable height, foldable cupracks	•
Fold down tines	•
Pitch adjustable tines	•
Place settings	**7**

Connected Features

Alerts and notifications	•
Cyber security updates until	**04 / 03 / 2028**
Education and onboarding	•
Monitoring	•
Software updates	•

Consumption

Energy rating	**3.5 star**
Energy usage	**136kWh/year**
In-use energy carbon emissions estimate	**83.0kgCO2e/year**
Water consumption (per wash cycle)	**6.9L**
Water rating	**4.5 star (WELS)**

Controls

Electronic fault/Diagnostic indicator	•
End of cycle beeps	•
Energy saving delay start option of up to 12 hours	•
Internal wash selector	•
Keylock	•
Rinse aid indicator light	•
Smart appliance	•

Features

Fan assisted drying	•
Flow through detergent dispenser	•
Quiet operation	•
SmartDrive™ technology	•

Performance

Noise emissions	**42 dBA**

Power requirements

Amperage	**5A**
Supply frequency	**50Hz**
Supply voltage	**220 - 240V**

Product dimensions

Depth	**573 mm**
Height	**410 mm**
Width	**599 mm**

Wash Program Modifiers

Extra Dry	•
Quick	•

Wash Programs

Delicate	•
Eco	•
Fast	•
Heavy	•
Medium	•
Rinse	•

Water connection

Water pressure	**30kPa - 1000 kPa**
Water supply	**3/4" BSP (20mm) Connector Water Inlet Hose**

SKU	80895

The product dimensions and specifications in this page apply to the specific product and model. Under our policy of continuous improvement, these dimensions and specifications may change at any time. You should therefore check with Fisher & Paykel's Customer Care Centre to ensure this page correctly describes the model currently available. © Fisher & Paykel Appliances Ltd 2020

Other product downloads available at fisherpaykel.com

- DWG
- DXF
- Data Sheet (English)
- Revit
- Rhino
- SketchUp

Where applicable:

All appliances use energy, and energy usage typically generates carbon emissions. **Fisher & Paykel Appliances' In-use Energy Carbon Emissions Estimate** indicates carbon emissions from a product's in-use energy. This is calculated either annually or per cycle, using the product's market-specific energy label energy consumption data multiplied by the carbon emissions factor for energy in your country or region.

Our In-use Energy Carbon Emissions Estimate is designed to assist customers in making informed purchasing decisions when comparing different Fisher & Paykel products. For example, a heat pump dryer typically has a lower In-use Energy Carbon Emissions Estimate than a vented dryer.



A PEACE OF MIND SALE

24 Hours 7 Days a Week Customer Support

T 1300 650 590 **W**www.fisherpaykel.com