91cm Series 9 Professional 5 Zone Induction Pyrolytic Cooker, 2 SmartZones

Series 9 | Professional

Stainless Steel



With intuitive touchscreen, induction cooktop and a convection oven with 15 functions, this is a perfect choice for those who have a passion for cooking

- Five induction cook zones, with options to pair zones to create up to two larger SmartZones
- Guided cooking using your touchscreen makes it simple to cook by food, function or recipe.
- 136L total oven capacity
- Beautiful LED halo-illuminated dials provide information at a glance

DIMENSIONS

Height	908 - 933 mm
Width	911 mm
Depth	740 mm

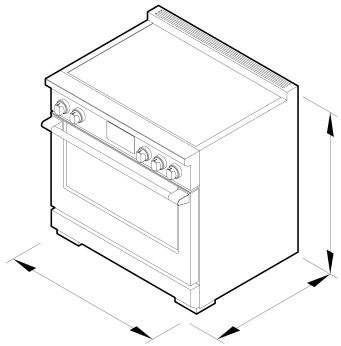

FEATURES & BENEFITS

Cook With Confidence

Our touchscreen interface provides an intuitive guided cooking experience that helps deliver perfect results, whether you've been cooking all your life or just starting out. Cook with a favorite method, a hero ingredient, or a go-to cooking function or recipe. The screen tilts for improved ergonomics and optimal visibility while cooking.

Generous Capacity

Featuring a large 136L total capacity convection oven, with enough room to fit a scrumptious family-sized roast with all the trimmings that is sure to impress.

Cooking Flexibility

SmartZone links two cooking zones and controls them as one, giving you the flexibility to use large pans and griddles and easily handle bigger food items such as a whole fish.

Cooktop Power

Instant and immediate control from the highest to the gentlest heat. The finely tuned cooktop controls let you sear, stir fry or simmer to perfection. Since heat is generated directly in the cookware through electromagnetism, induction offers an energy-efficient cooking option

Design Quality

This freestanding cooker has craftsmanship in every detail, with real stainless steel, high-quality glass, and beautifully weighted, halo illuminated dials. Each cavity features incandescent lights and full extension telescopic racks. From the robust legs to the powerful cooktop, this freestanding cooker is built to last.

Easy To Clean

The oven features a self-cleaning function and self-clean proof side racks, which don't need to be removed when using this function. The durable induction cooktop surface only needs a quick wipe after use to keep it clean.

SPECIFICATIONS

Accessories (included)

Adjustable feet covers	•
Branded coin end cap	•
Chromed shelf runners	1 set
Enamel baking tray	1
Full extension telescopic shelves	2
Grill rack	1

Capacity

Shelf positions	5
Total capacity	136 L
Usable capacity	108 L

Cleaning

Pyrolytic self-clean	•
Removable oven door	•
Removable shelf runners	•

Controls

Celsius/Fahrenheit temperature	•
Dial with illuminated halo	•
Dual control oven dials	•
Electronic clock	•
High resolution display	•
Metal illuminated dials	•
Multi-language interface	•
Precise cooking with food probe	•
Precise electronic temperature control	•
Recipe and food based functions	•
Sabbath mode	•
Smart appliance	•
Tilting touch screen interface	•

Oven features

Concealed element	•
Convection	•
Electronic oven control	•
Food probe	•
Full extension telescopic sliding shelves	•
True convection	•

Oven functions

Air fry	•
Bake	•
Classic bake	•
Dehydrate (to be deleted)	•
Number of functions	14
Pastry bake	•
Pizza bake	•
Rapid proof	•
Roast	•
Self-clean function	•
Slow cook	•
True convection	•
Warm	•

Oven performance

CoolTouch door	Triple glazed

Power requirements

Connection	Terminal Block
Service	40A
Supply	220-240 V, 50Hz

Product dimensions

Depth	740 mm
Depth (excluding handles)	740 mm
Height	908 - 933 mm
Width	911 mm

Rangetop features

Dual zones	•
Gentle heat	•
Induction cooking technology	•
PowerBoost	Yes
SmartZone	2

Recommended Back Guards Ventilation

Recommended hood	Integrated Insert Rangehood, 120cm and 90cm (HPB12048-2, HPB9048-2)

SKU	83029

The product dimensions and specifications in this page apply to the specific product and model. Under our policy of continuous improvement, these dimensions and specifications may change at any time. You should therefore check with Fisher & Paykel's Customer Care Centre to ensure this page correctly describes the model currently available. © Fisher & Paykel Appliances Ltd 2020

Other product downloads available at fisherpaykel.com

- DXF
- Archicad
- DWG
- Installation Guide (English)
- Planning Guide (English)
- Revit
- Rhino
- SketchUp
- User Guide (English)

Where applicable:

All appliances use energy, and energy usage typically generates carbon emissions. **Fisher & Paykel Appliances' In-use Energy Carbon Emissions Estimate** indicates carbon emissions from a product's in-use energy. This is calculated either annually or per cycle, using the product's market-specific energy label energy consumption data multiplied by the carbon emissions factor for energy in your country or region.

Our In-use Energy Carbon Emissions Estimate is designed to assist customers in making informed purchasing decisions when comparing different Fisher & Paykel products. For example, a heat pump dryer typically has a lower In-use Energy Carbon Emissions Estimate than a vented dryer.



A PEACE OF MIND SALE
24 Hours 7 Days a Week Customer Support

T 0800 372 273 **W**www.fisherpaykel.com