Wall Range Hood, 24", Box Chimney

Contemporary



This Contemporary style range hood extracts steam, grease and cooking odors quietly and efficiently.

- With three fan speeds plus a boost function, select the perfect extraction rate for your cooking
- Energy-efficient LED lighting to illuminate your cooking surface
- Powerful maximum air movement of 400CFM
- Wi-Fi enabled for notifications through the SmartHQ™ app

DIMENSIONS

Height	**25 - 40 3/4 "**
Width	**23 9/16 "**
Depth	**19 11/16 "**

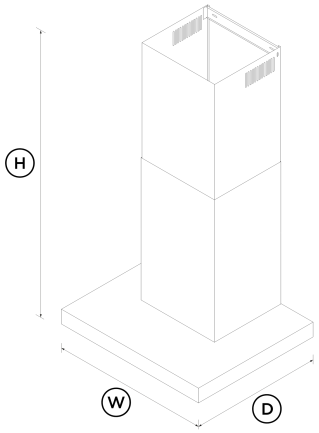

FEATURES & BENEFITS

Quiet and effective

Featuring perimeter extraction, four fan speeds, and a boost function, this range hood provides powerful extraction to quickly remove odors and steam. Odors can linger in the kitchen well after cooking is finished so the timer keeps the hood working for up to 15 minutes before automatically turning off.

Simple controls

The intuitive control panel responds to the touch of your finger. LED strip lighting illuminates the entire cooktop surface for the perfect sear or ideal reduction. Range hood settings, including temperature and fan speed, can be controlled via the SmartHQ™ app, with additional voice control options for fan speeds and lighting.

Easy cleaning

Designed for simple removal, the filters are easy to clean and dishwasher safe, while the glass and stainless steel finish is easily wiped clean. The SmartHQ™ app will notify you when to clean the filter to ensure you get the best performance out of your range hood.

Complementary design

The stainless steel finish of this vent hood will complement any contemporary kitchen and is designed to match the rest of Fisher & Paykel kitchen appliance family.

Easy installation

This range hood is the perfect partner to your Fisher & Paykel cooktop. It can be either externally ducted or internally recirculated, making it perfect for apartments.

SPECIFICATIONS

Accessories (sold separately)

Chimney extension	**792492**
Recirculation carbon filter	**792481**
Recirculation diverter	**792560**

Fan ratings

Maximum air movement	**400 CFM**
Maximum speed sound rating	**8 sones**
Speed 1 sound rating	**1.3 sones**

Installation and cleaning

Air outlet size	**6 "**
Dishwasher safe filters	**2**
Ducted	**Top extraction**
Recirculation	**Optional - top extraction**
Stainless steel filter cover	•
Two piece height adjustable flue	•

Performance

Extraction type	**Surface**
Fan speeds	**3**
Fan speeds + boost	•
Filter type	**Mesh**
Number of filters	**2**

Power requirements

Rated current	**5.2 A**
Supply frequency	**60 Hz**
Supply voltage	**120 V**
Total Power	**248 W**

Product dimensions

Depth	**19 11/16 "**
Height	**25 - 40 3/4 "**
Width	**23 9/16 "**

Ventilation features

Anti drop filters	•
Auto-off/Run-on timer	•
Filter cleaning alert	•
Light type	**LED**
Smart appliance	•

SKU 50208

The product dimensions and specifications in this page apply to the specific product and model. Under our policy of continuous improvement, these dimensions and specifications may change at any time. You should therefore check with Fisher & Paykel's Customer Care Centre to ensure this page correctly describes the model currently available. © Fisher & Paykel Appliances Ltd 2020

Other product downloads available at fisherpaykel.com

- DWG
- DXF
- Data Sheet (English)
- Installation Guide (English)
- Installation Guide (Canadian French)
- Installation Guide (Spanish)
- User Guide (English)
- User Guide (Canadian French)
- User Guide (Spanish)

Where applicable:

All appliances use energy, and energy usage typically generates carbon emissions. **Fisher & Paykel Appliances' In-use Energy Carbon Emissions Estimate** indicates carbon emissions from a product's in-use energy. This is calculated either annually or per cycle, using the product's market-specific energy label energy consumption data multiplied by the carbon emissions factor for energy in your country or region.

Our In-use Energy Carbon Emissions Estimate is designed to assist customers in making informed purchasing decisions when comparing different Fisher & Paykel products. For example, a heat pump dryer typically has a lower In-use Energy Carbon Emissions Estimate than a vented dryer.

24/7

A PEACE OF MIND SALE

24 Hours 7 Days a Week Customer Support

T 1.888.936.7872 **W**www.fisherpaykel.com