48" Series 7 DCS Grill, Rotisserie, LPG

Series 7 | All

Stainless Steel | LPG



Bring style and cooking flexibility to your outdoor space. With plenty of room to prepare food, to grill or slow cook with rotisserie.

- Four grill burners and an infrared rotisserie burner
- Build in to your outdoor kitchen bench, or purchase our DCS cart separately to create a freestanding grill.
- The infrared rotisserie burner is ideal for slow-cooking and roasting meats evenly with controlled searing.
- Constructed from 304-grade stainless steel, designed for outdoor durability and performance

DIMENSIONS

Height	616 mm
Width	1217 mm
Depth	673 mm

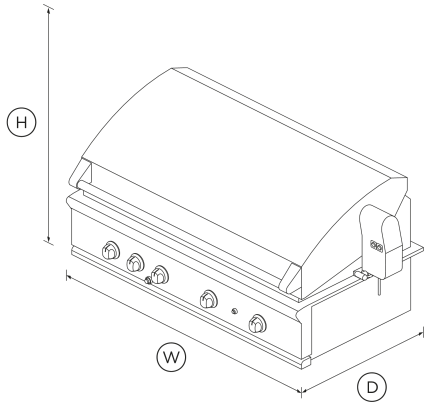

FEATURES & BENEFITS

Grease Management System™

The patented Grease Management System™ reduces flare-ups by channelling grease and oils away from the burner flames during grilling.

Full Surface Searing

Double-sided cast stainless steel grilling grates deliver perfect sear lines while at the same time, conveniently channelling away oil to an easily removable capture tray.

Design Quality

Designed to last a lifetime and featuring heavy grade 304 stainless steel throughout, these grills are cleverly engineered and detailed with welded & polished seams, heavy duty fittings, handles and controls.

Heavy-Duty Rotisserie

An infrared rotisserie burner provides controlled searing heat, and its heavy duty motor with stainless steel hexagonal rod and adjustable forks can accommodate a 25kg load.

Total Visibility

The Smart Beam™ grill light illuminates the entire cooking surface for better visibility at night. A 40 watt halogen light is integrated into the patented weather proof rotisserie motor, making it easily accessible and ergonomic.

Stainless Steel Burners

The precision ported u-shaped stainless steel burners are rated at a significant 27 MJ/h each – designed for premium quality and performance.

SPECIFICATIONS

Burner ratings

Grill burners	26.5 MJ/h
Integrated rotisserie burner	19.5 MJ/h
Regulator pressure	2.75 kPa
Total nominal gas consumption	126 MJ/h

Cooking Surface Area

Primary cooking area	0.54 sq. m.
Total cooking area	0.75 sq. m.
Warming rack area	0.21 sq. m.

Features

304 grade Stainless Steel burner tubes	•

304 Grade stainless steel gas manifold	•
Designer metal control knobs	•
Double sided Stainless Steel grilling grates	•
Full surface searing	•
Hood temperature gauge	•
Removable stainless steel warming rack	•
Rotisserie system	•
Secondary cooking	1-level warming rack
Stainless steel drip tray	•

Finish

Weather resistant	•

Installation

Available in built-in or on cart applications	•
Optional cart mount	CAD-48

Performance

Ceramic radiant technology	•
Grease management system™	•
Speed of rotisserie	6 rpm
Weight rotisserie can handle	25 kg

Power requirements

Grill power supply	9V Battery for Ignition
Rotisserie power supply	240 V
Rotisserie supply frequency	50 Hz

Product dimensions

Depth	673 mm
Height	616 mm
Width	1217 mm

SKU	85244

The product dimensions and specifications in this page apply to the specific product and model. Under our policy of continuous improvement, these dimensions and specifications may change at any time. You should therefore check with Fisher & Paykel's Customer Care Centre to ensure this page correctly describes the model currently available. © Fisher & Paykel Appliances Ltd 2020

Other product downloads available at fisherpaykel.com

- Installation & User Guide (English)
- DCS Service & Warranty (English, Canadian French)

Where applicable:

All appliances use energy, and energy usage typically generates carbon emissions. **Fisher & Paykel Appliances' In-use Energy Carbon Emissions Estimate** indicates carbon emissions from a product's in-use energy. This is calculated either annually or per cycle, using the product's market-specific energy label energy consumption data multiplied by the carbon emissions factor for energy in your country or region.

Our In-use Energy Carbon Emissions Estimate is designed to assist customers in making informed purchasing decisions when comparing different Fisher & Paykel products. For example, a heat pump dryer typically has a lower In-use Energy Carbon Emissions Estimate than a vented dryer.

24/7

A PEACE OF MIND SALE
24 Hours 7 Days a Week Customer Support
T 0800 372 273 Wwww.fisherpaykel.com