16.9 cu ft Series 7 French Door Refrigerator, Ice & Water

Contemporary



Make a statement in black. With large capacity and flexible storage, water dispenser and ice maker, this model has style and substance.

- Brushed metal handles
- ActiveSmart™ Foodcare helps keep food fresher for longer
- Bottom freezer drawer
- EZKleen anti-fingerprint coating

DIMENSIONS

Height	**67 3/4 "**
Width	**31 1/8 "**
Depth	**27 3/8 "**

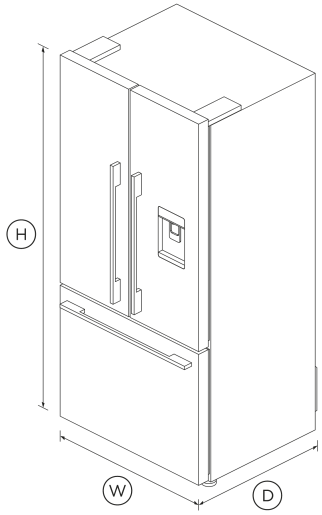

FEATURES & BENEFITS

Activesmart™ Foodcare

ActiveSmart™ technology understands that the refrigerator door is the most opened in the house. It constantly adjust temperature, airflow and humidity, maintaining an optimum environment and helping keep food fresher for longer.

Clever Energy

Your refrigerator adapts to daily use by cooling and defrosting only when needed. This means your refrigerator uses the energy it needs without compromising on food care.

Easy To Clean

No more dirty marks with our EZKleen feature for stainless steel refrigerators. Anti-fingerprint coating lets you simply wipe clean any finger marks. Spill-safe secure glass shelves easily capture any drips or leaks.

Design Quality

Our refrigerators are designed and built using robust, quality materials, with stainless steel exteriors and solid glass for the interior shelving.

Humidity Control

Your fruit and veges need different environments. The humidity control slides in each storage bin create a microclimate that helps keep food fresher for longer.

Ice Maker

The internal ice maker delivers fresh ice to a dedicated freezer bin. Simply turn it off to free up freezer space or during busy times boost ice production by up to 30%.

Ultra Slim Water Dispenser

The slimline water dispenser is easy to use. The angled water delivery means that almost any size or shape of vessel can be filled, while taking up no storage space in your refrigerator door.

SPECIFICATIONS

Accessories (sold separately)

Water filter replacement	**847200 - FWC3**

Capacity

Total gross capacity	**16.9 cu ft**
Volume freezer	**4.8 cu ft**

Volume refrigerator	**12.1 cu ft**

Consumption

Energy rating	**Energy Star**
Energy usage	**448kWh/year**
In-use energy carbon emissions estimate	**51.7kgCO2e/year**

Features

Adjustable door shelves	**6**
Adjustable glass shelves	**3**
Covered door shelves	**2**
Deli storage bins	**2**
Door alarm	•
Fruit and vegetable bins	**2**
LED lighting	•
SmartTouch control panel	•
Soft close doors	•
Stackable bottle holders	**4**
Ultra slim water dispenser	•
Water Filter	**847200**

Freezer Features

Automatic ice maker	•
Bottle chill	•
Door alarm	•
Fast freeze	•
Ice bin and scoop	•
Ice Boost	•
LED Lighting	•

Performance

ActiveSmart™ Foodcare	•
Adaptive defrost	•
Frost free freezer	•
Humidity control system	•
Inverter controlled compressor	•
Sabbath mode	•

Product dimensions

Depth	**27 3/8 "**
Height	**67 3/4 "**
Width	**31 1/8 "**

SKU	25938

The product dimensions and specifications in this page apply to the specific product and model. Under our policy of continuous improvement, these dimensions and specifications may change at any time. You should therefore check with Fisher & Paykel's Customer Care Centre to ensure this page correctly describes the model currently available. © Fisher & Paykel Appliances Ltd 2020

Other product downloads available at fisherpaykel.com

- Energy Label
- Water Filter Replacement Instructions - Parts 847200 and 847201 (English)
- Water Filter Replacement Instructions - Parts 847200 and 847201 (French)

Where applicable:

All appliances use energy, and energy usage typically generates carbon emissions. **Fisher & Paykel Appliances' In-use Energy Carbon Emissions Estimate** indicates carbon emissions from a product's in-use energy. This is calculated either annually or per cycle, using the product's market-specific energy label energy consumption data multiplied by the carbon emissions factor for energy in your country or region.

Our In-use Energy Carbon Emissions Estimate is designed to assist customers in making informed purchasing decisions when comparing different Fisher & Paykel products. For example, a heat pump dryer typically has a lower In-use Energy Carbon Emissions Estimate than a vented dryer.

24/7

A PEACE OF MIND SALE

24 Hours 7 Days a Week Customer Support

T 1.888.936.7872 **W**www.fisherpaykel.com