90cm Series 9 Integrated Insert Wall Rangehood

Series 9 | Integrated

Stainless Steel



With edge-to-edge extraction, this efficient, stylish rangehood is perfectly hidden away in your cabinetry.

- With five fan speeds, select the perfect extraction rate for your cooking
- With dimmable LED strip lighting
- 1910m³/hr maximum airflow
- Dishwasher safe filters that are easy to remove and clean

DIMENSIONS

Height	462 mm
Width	880 mm
Depth	480 mm

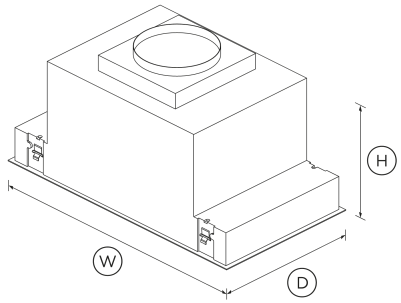

FEATURES & BENEFITS

Achieve The Invisible

This high quality integrated rangehood seamlessly blends behind cabinetry in a variety of kitchen layouts. Beautiful in its simplicity, this product has brushed finished surfaces with no visible screws.

Edge To Edge Extraction

Filters effectively reach edge to edge, maximising the capture and extraction of steam, odours and grease.

Full Surface Lighting

LED lighting illuminates the entire cooktop surface so you can ensure you have the perfect sear or ideal reduction. With dimmable lights featuring fade in and fade out features.

Easy To Use

Enjoy fingertip control of LED-illuminated, soft-touch buttons. This model also comes with a remote control for convenience.

Quiet And Efficient

Powered by a brushless DC motor, the Integrated Rangehood operates more efficiently, more reliably and with less noise than units with AC motors.

Easy Cleaning

Multi-layered filters effectively trap grease particles during extraction. Designed for simple removal, they're easy-to-clean and dishwasher safe.

Simple Installation

Designed for simple installation in your kitchen cabinetry, with an adjustable mounting system.

SPECIFICATIONS

Fan ratings

Maximum air movement	1910 m³/hr
Speed 3 sound rating	57 dBA

Installation and cleaning

Air outlet size	250 mm
Dishwasher safe filters	4
Ducted	Vertical only

Performance

Extraction type	Surface
Fan speeds	5
Filter type	Stainless Steel Baffle

Power requirements

Supply voltage	230 V

Product dimensions

Depth	480 mm
Height	462 mm
Width	880 mm

Ventilation features

Auto-off/Run-on timer	•
Dimmable lights	•
Filter cleaning alert	•
Light type	LED strip
Number of light settings	5
Simple sensing	•

SKU	50247

The product dimensions and specifications in this page apply to the specific product and model. Under our policy of continuous improvement, these dimensions and specifications may change at any time. You should therefore check with Fisher & Paykel's Customer Care Centre to ensure this page correctly describes the model currently available. © Fisher & Paykel Appliances Ltd 2020

Other product downloads available at fisherpaykel.com

- DWG
- DXF
- Archicad
- Data Sheet (English)
- Installation Guide (English)
- Revit
- Rhino
- SketchUp
- User Guide (English)

Where applicable:

All appliances use energy, and energy usage typically generates carbon emissions. **Fisher & Paykel Appliances' In-use Energy Carbon Emissions Estimate** indicates carbon emissions from a product's in-use energy. This is calculated either annually or per cycle, using the product's market-specific energy label energy consumption data multiplied by the carbon emissions factor for energy in your country or region.

Our In-use Energy Carbon Emissions Estimate is designed to assist customers in making informed purchasing decisions when comparing different Fisher & Paykel products. For example, a heat pump dryer typically has a lower In-use Energy Carbon Emissions Estimate than a vented dryer.

24/7

A PEACE OF MIND SALE
24 Hours 7 Days a Week Customer Support
T 0800 372 273 Wwww.fisherpaykel.com