9kg Series 7 Front Loader Washer, Steam Care



This Fisher & Paykel 9kg washing machine has 13 different fabric care cycles to cater for every type of load.

- Reduce odours, refresh and de-wrinkle clothes with no need for a full wash cycle, using Steam Refresh
- Save time or maximise energy efficiency and reduce water usage with the Optimise Wash option
- Quickly and easily add or remove any item from the machine during the wash cycle with the Add a Garment function
- Delivers a quiet, reliable wash with its unique cushion drum design powered by SmartDrive™ technology

DIMENSIONS

Height	**850 mm**
Width	**600 mm**
Depth	**655 mm**

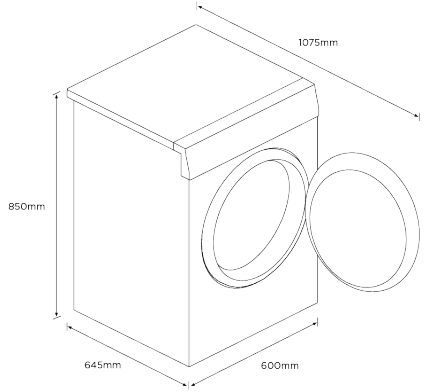

Refer to install guide for further specifications

FEATURES & BENEFITS

13 Fabric Care Cycles

13 fabric care cycles including Steam Refresh, Quick 30, Bulky and Easy Iron. A gentle, effective wash action protects clothes while delivering an optimal wash performance.

Quick Steam Refresh

Steam Refresh is perfect for occasions where clothes have been worn once and need freshening up. The 20 minute cycle will reduce odours and de-wrinkle clothes, making them ready to wear again without the need for a full wash cycle.

Customise Your Wash

Shorten your wash and rinse times with our Speed option, or choose Eco to wash more sustainably at lower temperatures with less water.

A Smarter, Quieter Motor

SmartDrive™ Technology is a gentle, quiet, and efficient combination of smart electronics and a direct drive motor that senses the load to deliver better fabric care.

Approved By Woolmark™

Our Wool cycle is an extra gentle warm wash, perfect for machine washable woollen items. It has a Woolmark™ guarantee so you can wash with confidence, saving time on hand washing.

Add A Garment

Missed an item from your wash? Our Add a Garment function allows you to pause your wash cycle, open the door and add or remove items, then carry on washing.

Designed To Match

The complete package for a beautiful laundry. This washing machine is designed to match both the 8kg Heat Pump Condensing Dryer and the 8kg Condensing Dryer. With outstanding aesthetics and complimentary wash and dry cycles, they become the perfect pair to deliver complete fabric care.

SPECIFICATIONS

Accessories (sold separately)

Stacking Kit	**428122**

Capacity

Capacity	**9 kg**

Consumption

Energy rating	**4.5 star**
Estimated Yearly Energy Usage (kWh)	**275kWh/year**
In-use energy carbon emissions estimate	**167.8kgCO2e/year**
Water consumption per cycle	**77L**
Water rating	**4.5 star (WELS)**

Features

Add a garment (immediate door opening)	•
Anti-fungal door gasket	•
Auto out of balance correction	•
Automatic water level	•
Child/Keylock	•
Delay start	•
Excess foam detection	•
Flood protection	•
Interior light	•
Pre Wash	•
Progress indicator	•
Rinse +	•
SmartTouch™ control dial	•
Stainless steel drum	•
Time to go	•
Wash +	•
Water supply	**Cold**
Wrinkle Free	•

Performance

Auto load sensing	•
Maximum spin speed	**1400 rpm**
Number of spin speeds	**4**
Smart Diagnosis of problems	•
SmartDrive™ technology	•
Steam Care	•
Vortex wash	•

Product dimensions

Depth	**655 mm**
Height	**850 mm**
Width	**600 mm**

Wash Cycles

Bulky	•
Cottons	•
Delicate	•
Drum Clean	•
Easy Iron	•
Everyday	•
Heavy	•
Number of wash cycles	**13**
Quick 15	•
Quick 30	•
Rinse	•
Sanitise	•
Spin	•
Steam Refresh	•
Wool	•

SKU	93278

The product dimensions and specifications in this page apply to the specific product and model. Under our policy of continuous improvement, these dimensions and specifications may change at any time. You should therefore check with Fisher & Paykel's Customer Care Centre to ensure this page correctly describes the model currently available. © Fisher & Paykel Appliances Ltd 2020

Other product downloads available at fisherpaykel.com

- Energy Label
- Installation Guide (English)
- User Guide (English)

Where applicable:

All appliances use energy, and energy usage typically generates carbon emissions. **Fisher & Paykel Appliances' In-use Energy Carbon Emissions Estimate** indicates carbon emissions from a product's in-use energy. This is calculated either annually or per cycle, using the product's market-specific energy label energy consumption data multiplied by the carbon emissions factor for energy in your country or region.

Our In-use Energy Carbon Emissions Estimate is designed to assist customers in making informed purchasing decisions when comparing different Fisher & Paykel products. For example, a heat pump dryer typically has a lower In-use Energy Carbon Emissions Estimate than a vented dryer.

24/7

A PEACE OF MIND SALE

24 Hours 7 Days a Week Customer Support

T 1300 650 590 **W**www.fisherpaykel.com